A Practical Approach to Passive House

An architect's "best work to date" is a superefficient home that you could build

BY STEVEN BACZEK

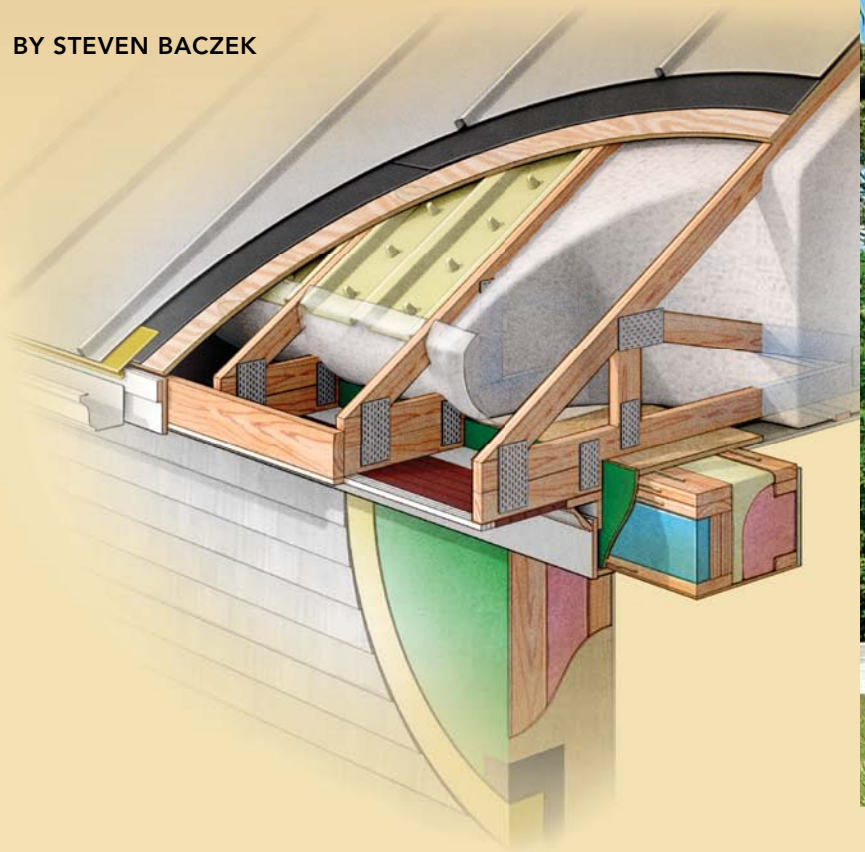

I began my career in architecture nearly 17 years ago after spending many years as a contractor. My background has given me a strong appreciation for and understanding of people who design and build homes. I've designed more than 30 zero-energy homes, six deep-energy retrofits, and numerous high-performance houses. In truth, the path to optimum performance and durability hasn't always been easy.

In many ways, the knowledge that I've gained over the years has culminated in the design and building of this home—my first certified Passive House, in the coastal community of Falmouth, Mass.—which I confidently consider my best work to date. Not only am I proud of what we accomplished in this project, but I'm also proud of how we did it. My informed, organized team and I were able to build a comfortable and exceptionally durable Passive House with standard building materials and practical construction techniques—an approach that's replicable for any homeowner, builder, or architect looking to build a cutting-edge house of comparable performance.

Chasing the plaque

Passive House standards are the strictest residential-building parameters we have in this country, and hitting their performance target is a challenge.

Passive House isn't for everyone, and there are some caveats worth considering. Passive House standards are performance-based, with no relevance to cost or aesthetics. Because of this, material and product options can be limited when compared to, say, an Energy Star home. For example, we wanted to use insulated, triple-glazed wood windows on this house because of the way they looked, but when we modeled them with the Passive House software, we realized that they wouldn't perform well enough. We opted instead for fiberglass Thermo-Tech

Photo this page: John Moore

Passive House in detail

Because Passive House standards are so well defined and because Passive House modeling software—known as the Passive House Planning Package—predicts home performance, the path to certification is clear. Meet the benchmarks, and you'll obtain the certification. The standards focus on three building attributes: airtightness, Btu consumption, and energy usage.

AIRTIGHTNESS

The Passive House standard requires the home to be tested at or below 0.60 air changes per hour (ACH) at 50 pascals (Pa)—122cfm at 50 Pa in this house. That's tight, considering the typical code-built house might have a tightness range of 3.0 to 7.0 ACH at 50 Pa.

BTU CONSUMPTION

Passive House standards require the annual heating and cooling consumption to be below 4755 Btu per sq. ft. annually. A code-built house can have a consumption rate nearly 10 times that amount.

ENERGY USAGE

The maximum energy use in a Passive House, not counting any photovoltaic offset, must not be greater than 11.1kwh per sq. ft. Building codes don't have energy-use provisions, but it's estimated that the average American house consumes electricity at a rate of 958kwh per month, or 11,496kwh per year.

windows that met Passive House standards but were different from what the homeowner had originally wanted.

Chasing the Passive House plaque is a goal that should be considered carefully and talked about throughout the design phase to avoid too much compromise. Initially, I think Passive House certification should be a goal written in pencil. If the client is interested solely in a very energy-efficient house and not necessarily the plaque on the wall, a house that reaches 80% or 90% of the standard is less costly to build and still far better performing than any typical code-built house in the United States. It's even better than those houses that are built to other green-building standards.

We were committed to the standard and understood that due to the limited number of comparable, exemplary projects, there was limited knowledge within the industry on how to construct a Passive House. Because of that shortcoming, our approach to the project had to be planned carefully.

Organized from the start

I've developed a simple two-phase philosophy when it comes to designing high-performance houses: I aim to design a house that, when built correctly, converts energy as

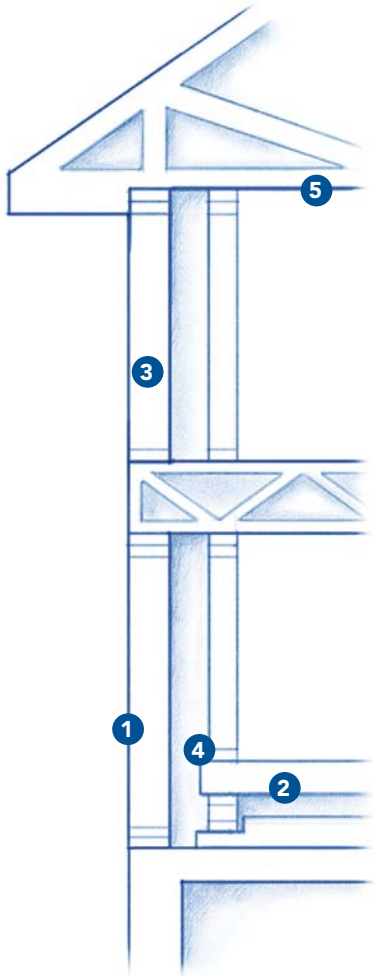

Although out of the ordinary, this house was assembled in a way that allowed it to be dried in quickly. Here is a snapshot of the building order:

1. 2x6 exterior walls are framed along with the second floor and roof.
2. First floor is framed and insulated, not fully sheathed.
3. A 2-in. flash coat of spray foam is applied to exterior walls.
4. First floor is sheathed, 2x4 exterior walls are built, and cavity is insulated with fiberglass.
5. Drywall is hung on second-floor ceiling; interior 2x4 partition walls are built.

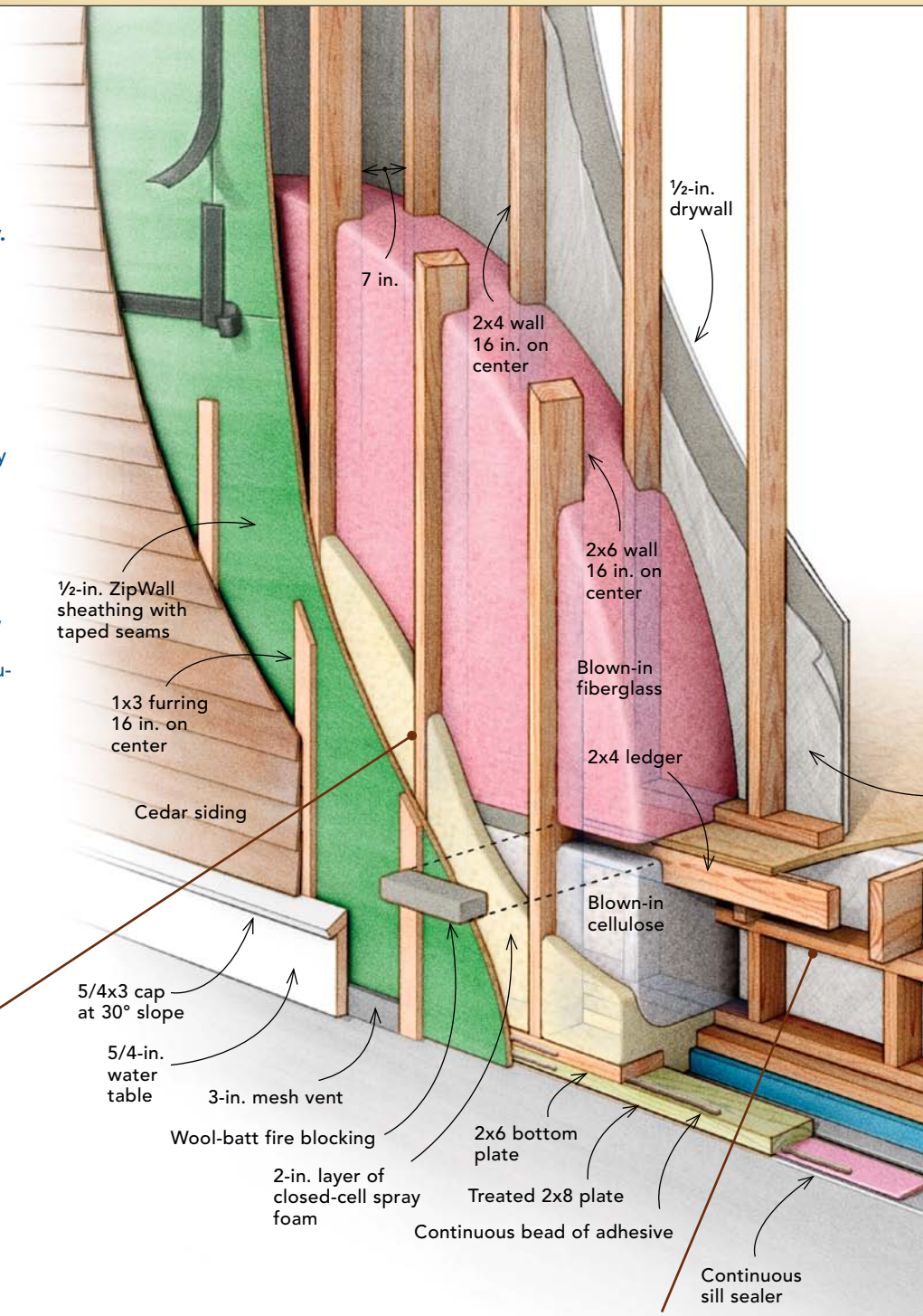

BUILD TWO CONVENTIONAL WALLS

Of the various wall assemblies, a wood-frame double wall is the easiest way to achieve high R-values. This home has a conventionally framed 2x6 outer wall with a 2x4 inner wall mirroring it. Framers can build these walls easily. The assembly allows a high degree of flexibility in width, which accommodates various R-value targets easily.

Because of the floor design, the 2x6 walls were framed first, followed by the second floor and the roof, which allowed the home to be dried in quickly.

INSULATE ABOVE THE SLAB

Instead of more than a foot of rigid foam insulating the slab from below, this house has a raised-frame floor built above it. This floor system is recognizable to most builders, it makes plumbing installation easier, it costs less to insulate, and it enables the conventional installation of solid-plank wood flooring.

This approach eliminates the mass of the slab, which many Passive House designers use as a heat sink to regulate interior temperatures. However, the energy penalty of excluding the mass of the slab from this assembly was minor, especially when weighed against the loads on this house and the ease of construction.

BREAK THE THERMAL BRIDGE AT THE SECOND FLOOR

Floor trusses make up the second-floor framing on this house. Detailing the intersection of the floor and walls has to be considered carefully to eliminate air leaks and thermal bridging.

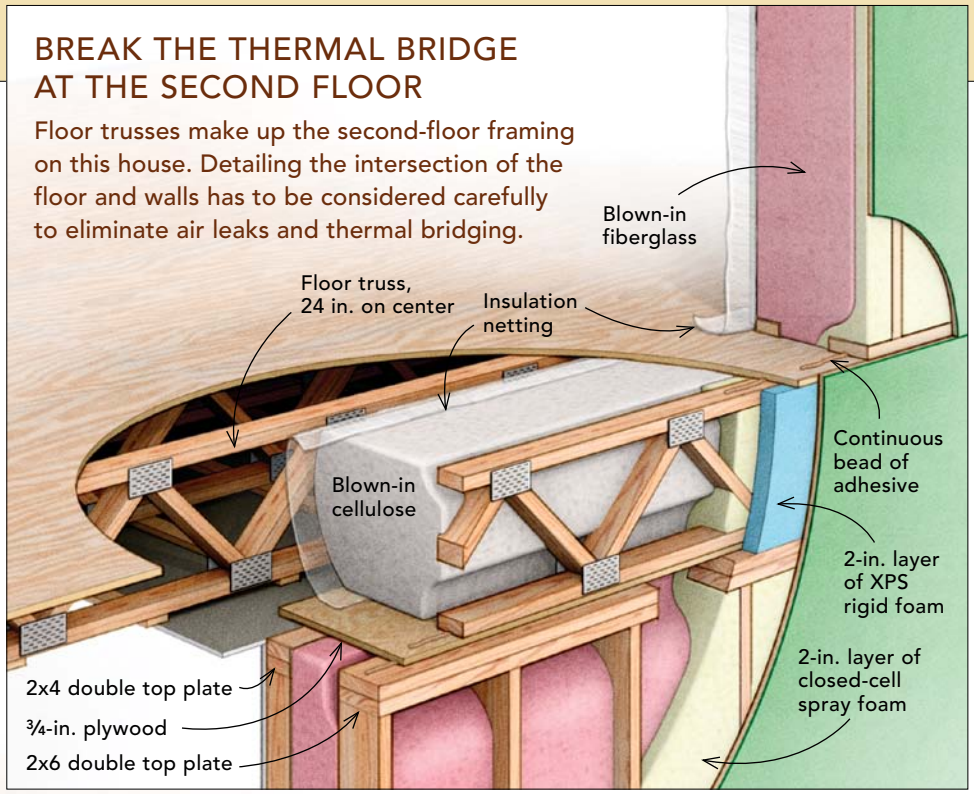

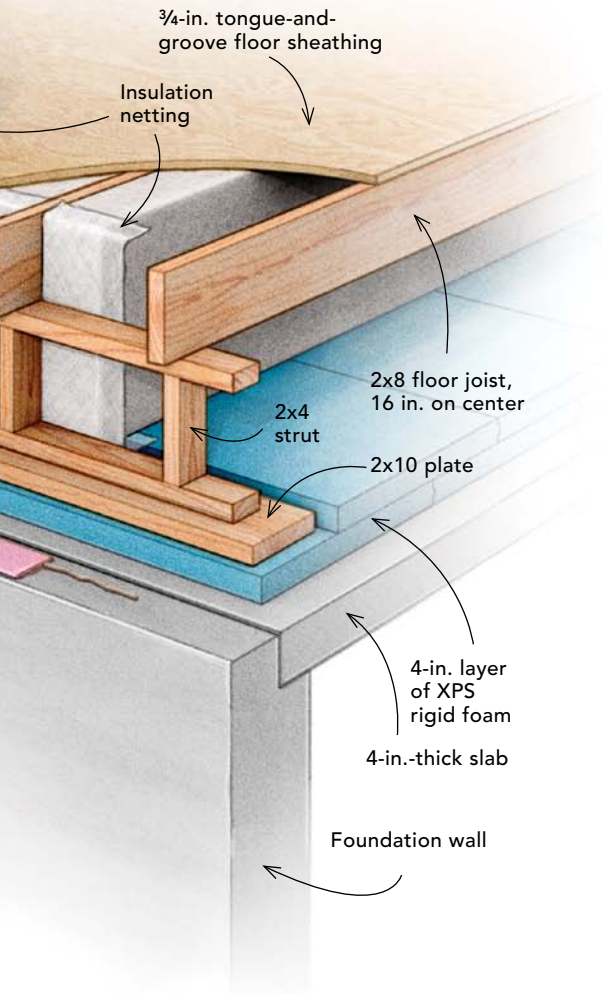

inexpensively as possible and holds on to that energy for as long as possible.

While the goal is always that simple, the process never is. Building a Passive House is demanding. Planning is imperative, so we chose to use a design/build methodology. The homeowner, the architect, the energy consultant, the general contractor, and the subs all need to have a vested interest in the project. This interest translates to responsibility. In a Passive House project—where each detail, from the window selection to the continuity of a bead of caulk beneath a wall's bottom plate, matters greatly—that sense of responsibility results in a successful project.

Because we wanted to build that sense of responsibility and because none of the parties had previously constructed a Passive House, we held a number of preconstruction get-togethers that we called "trade-day meetings." The general contractor and I sat with each subcontractor to define the goals of the project, to outline that subcontractor's specific responsibilities, and to ask about any concerns or bits of advice that might benefit the project. This planning helped all involved to develop a clear understanding of the project and the effect their work would have on it. For example, the framers knew that if the house didn't pass its first test for airtightness, which occurs when the house is really just a big plywood box, then they would be held accountable. Good subs welcomed the challenge and learning experience, and they delivered. That first test showed an air-exchange rate of 32cfm at 50 Pa, well under our goal of 60cfm at 50 Pa.

Drafting practical plans

One of the biggest problems I see in the design and construction industry is that architects and designers want to design homes and then apply energy-efficiency features or durability features to the design instead of making them an integral part of the house. High R-values are made possible by the way this house was framed. There was no need to apply systems to the home to compensate for an inefficient or flawed design.

In creating construction drawings, I carefully drafted two identical sets of wall-section details. One set delivered the rough framing dimensions and air-sealing details. The companion set delivered the exterior and interior finishes. The construction details were driven by my desire to have them be recognizable to the crews working on the house. The goal was not to overburden the subcontractors with information that they may not need. This allowed the framer, for example, to focus clearly on framing and the associated air-sealing. Likewise, the siding contractor did not need to have the air-sealing information of the wood frame.

The field of building science (pp. 70-75) is saturated with complicated construction details that are sometimes difficult to implement accurately. That doesn't have to be the case. For example, many Passive Houses have a large amount of rigid foam beneath the slab, well over a foot in most cases, and around the slab's edge. This approach not only is costly, but it also makes detailing the transition between the slab edge and the wall plane cumbersome to even the savviest contractor. In the initial design meetings, our energy consultant wanted to see a minimum of 8 in. of rigid foam around the edge of the slab. Looking for a better and easier solution, I decided to move the slab outside the thermal envelope, to frame a more conventional floor over two layers of rigid foam, and to insulate the floor to R-76 with cellulose. Essentially, I took our wall assembly and

USE A VENTED TRUSS ROOF

Cost, airtightness, and speed and ease of installation were the motivating factors in the decision to build a truss roof with an insulated attic floor. Because the interior walls had not been framed when the drywall was hung on the second-floor ceiling, hanging large sheets was easier, and many of the seams that could lead to air leakage were eliminated.

The attic isn't used for storage or to house mechanicals, so an interior attic hatch—which is notoriously leaky—was unnecessary. Instead, a small doorway was placed in a gable end of the roof and positioned above the insulation level, so its leakiness has no bearing on the thermal envelope's performance. The door is accessed by ladder.

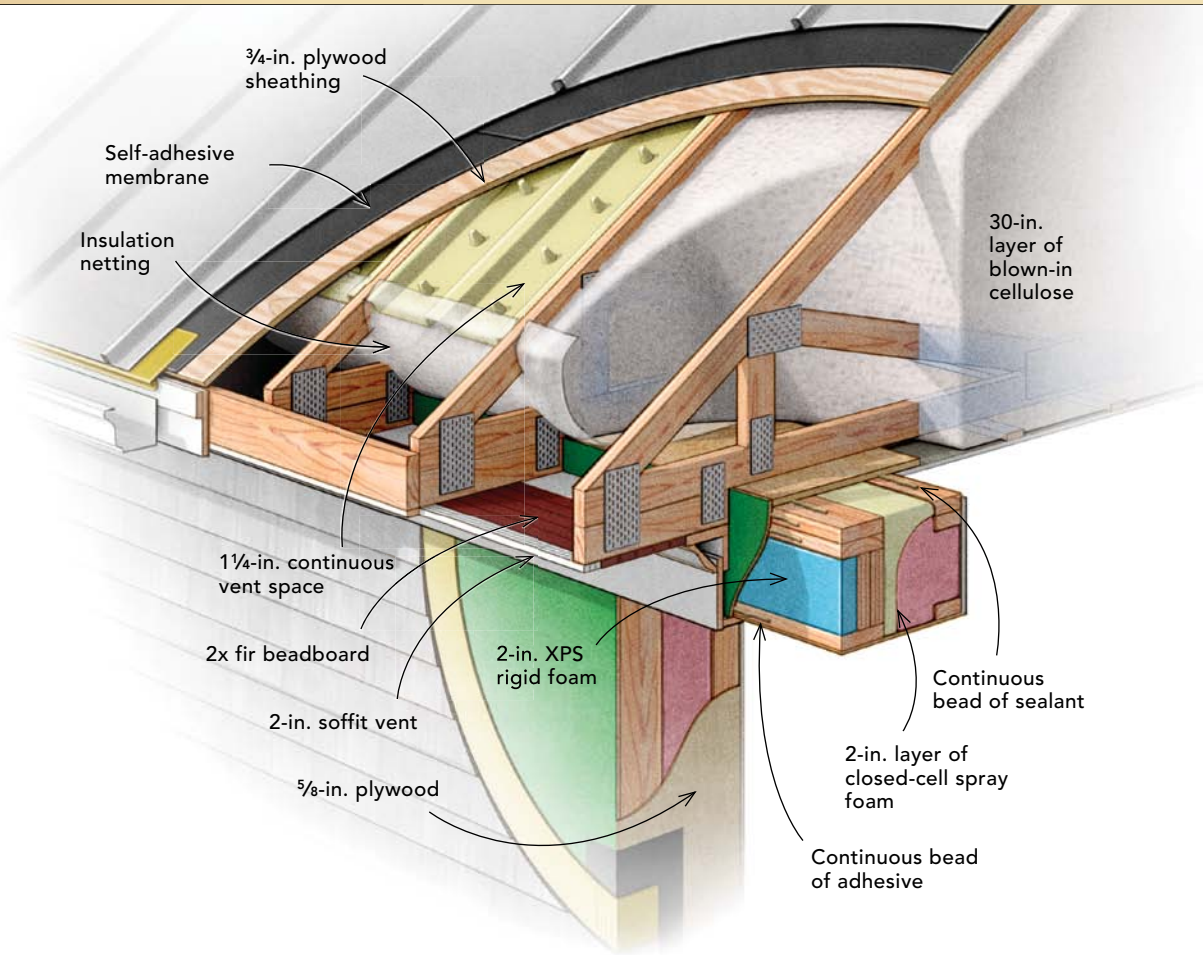

laid it on its side, a concept our framers could implement easily and correctly.

It seems that many in our industry are searching for a silver bullet or new material that solves all our problems. This plan reinforces the idea that we can build better-performing homes with the building materials that are currently available and construction techniques that are commonplace.

Holding on to energy

At its core, this house is designed and constructed to satisfy the simple desire to convert energy as inexpensively as possible and to keep it contained for as long as possible. This home does both extremely well.

The solar gain that comes through predominantly south-facing windows meets 55% of the home's heating demand, helping to reduce its cold-season operating cost considerably. Because this house is so airtight and well insulated—the floor is R-76, the walls are R-60, and the roof is R-105—the heating and cooling loads are low. Supplemental space heating, as well as cooling and dehumidification, is accomplished with two high-efficiency ductless minisplits. These Daikin units have exceptional dehumidification performance, which is important because this home is a stone's throw from saltwater. An UltimateAir energy-recovery ventilator (ERV), chosen because it is well insulated and electrically efficient, helps to meet Passive House heating, cooling, and primary-energy criteria. The ventilation system was commissioned, meaning the intake and exhaust airflows were balanced.

To ensure comfort, the supply ventilation air is distributed to the bedroom closets first. The tempered air then is distributed to living spaces through louvered closet doors. This prevents drafts of incoming air from cooling conditioned air in the living spaces.

We estimate that the electricity consumed by the mechanical systems—as well as by the LED lights, energy-efficient appliances, and electric water heater—would have cost $930 annually. However, we also installed a 2.8kw photovoltaic array on the roof, which will lower the home's annual net operating cost to around $280.

Making it last

As the architect, I believe that this home should have a level of durability proportional to its energy efficiency.

The Galvalume metal roof will outlast most other roofing products, and its deep overhangs will help to protect the home's exterior. The wall cladding, a mix of cedar shakes and clapboards, was installed over a rain screen and left unfinished. The home will weather to the silvery-gray tone common to the beach homes in the region, and because there isn't any finish to maintain, the homeowner will never have to worry about maintenance.

The result of all this work is an ultra-high-performance home that's not only practical to build but also practical to live in. □

Steven Baczek is an architect in Reading, Mass. Illustrations by John Hartman.

TWO WAYS TO DETAIL WINDOWS IN THICK WALLS

Windows and doors are the Achilles heel of superinsulated wall assemblies. Prior to the installation of the windows and doors, this home had been tested for airtightness twice. The first test, when the home was a plywood shell, resulted in an air-leakage rate of 32cfm at 50 Pa. The second test, which took place after a 2-in.-thick coat of spray foam was applied to the back of the exterior wall, resulted in an air-leakage rate of 25cfm at 50 Pa. Finally, after the doors and the windows were installed, the air-leakage rate jumped up to 125cfm at 50 Pa. The airtightness target for this Passive House was 122cfm at 50 Pa. The final test, done just prior to occupancy, registered 116cfm at 50 Pa.

With so much performance riding on the windows and their installation, getting the details correct was critical. This home has windows placed in two positions within its 17-in.-thick walls. The first floor has *outies*—that is, windows flush with the outer plane of the wall. The second floor has *innies*, or windows that are set into the wall.

Innies ▶

Windows set into the wall are better protected from the elements, but they require detailed attention to the exterior sill, which covers part of the exterior wall. Also, because these windows are flangeless, they're more difficult to air-seal. Flangeless units are suspended within the rough opening, making the perimeter connection with the air-barrier sheathing a soft joint, which challenges the concept of continuity.

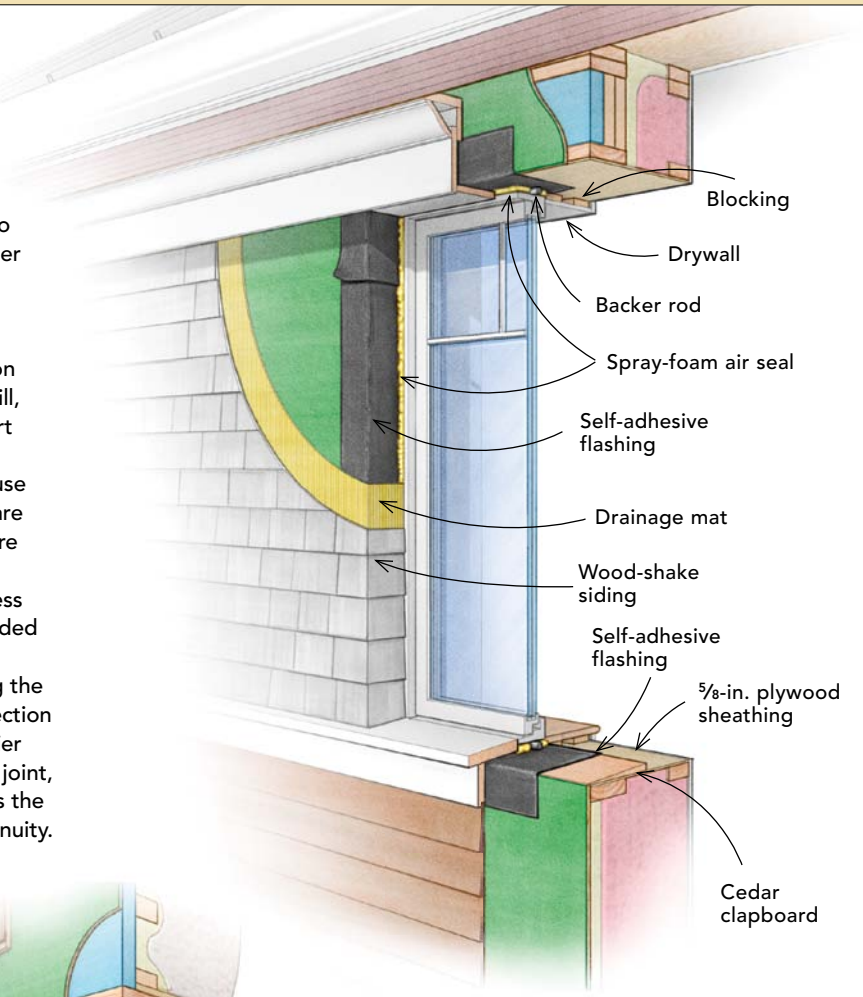

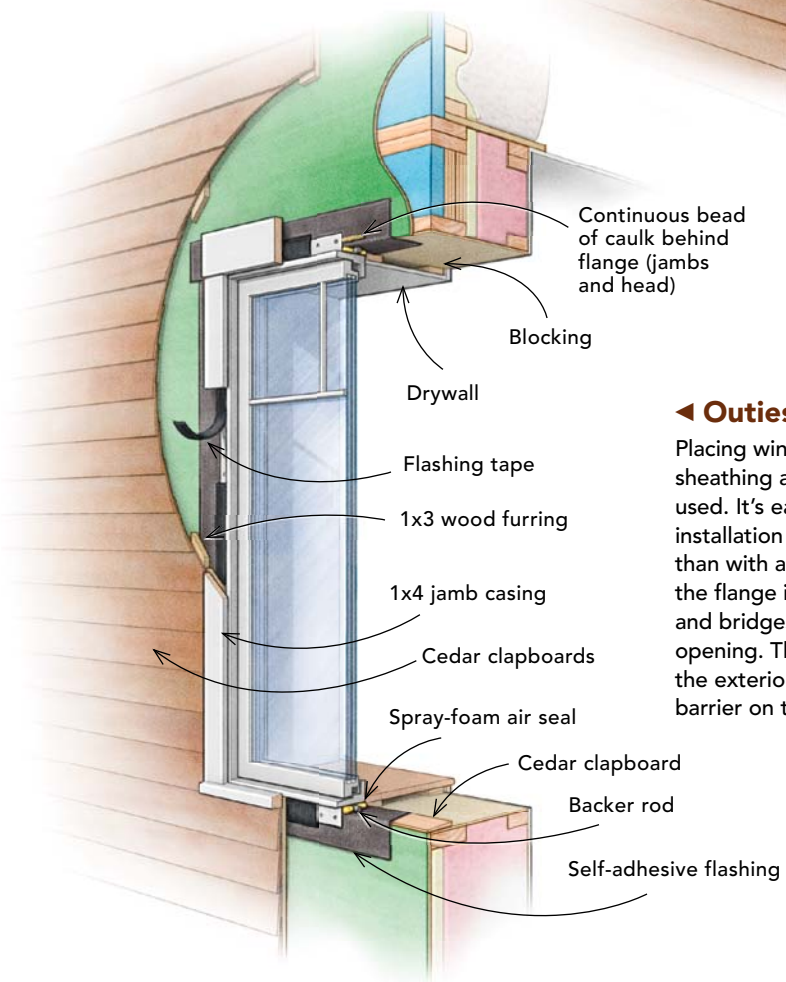

◀ Outies

Placing windows in line with the wall sheathing allows flanged units to be used. It's easier to get an airtight installation with a flanged window than with a flangeless unit because the flange is part of the window frame and bridges the gap across the rough opening. This makes the connection to the exterior sheathing, which is the air barrier on this home, more seamless.