Mr. Kessler,

I am still working on the plans. This is a printout of the current plans. I just noticed that I still have batt insulation on one of the roof details; this will be changed. Will be working on the plans this afternoon.

Take care,

Maurice White

Front Elevation
Scale: 1/4" = 1'

TABLE OF CONTENTS

PAGE	DESCRIPTION
A1 THRU A3	ELEVATIONS
A4	BASEMENT ARCHITECTURAL PLAN
A5	FIRST FLOOR ARCHITECTURAL PLAN
A6	SECOND FLOOR ARCHITECTURAL PLAN
A7 THRU A8	STAIR DETAILS
A9	SECTIONS OF FULL RESIDENCE
S1	FOUNDATION PLAN
S2	FIRST FLOOR FRAMING PLAN
S3	UPPER FLOOR FRAMING PLAN
S4	HEADER SPECIFICATIONS AND OPENING CHART
S5	WALL SECTIONS
D1 THRU D6	DETAILS
D7	GENERAL DETAILS
N1	NOTES

ALEXCOM & ASSOCIATES, INC.
GEOTECHNICAL / CIVIL AND
STRUCTURAL ENGINEERS
11 DEBRUEN LANE
FREDERICKSBURG, VIRGINIA 22405
PHONE (540) 371-3157, FAX (540) 371-7920

NO.	DATE	REVISION

Elevations
for Eric Kessler
Potomac Landing (Lot 75)
King Geroge County, Virginia

DESIGNED BY	DATE
M.W.W.	12/20/13
CHECKED BY	DATE
M.W.W.	12/20/13
DRAWN BY	DATE
M.W.W.	12/16/13
SURVEYED BY	DATE

COMMONWEALTH OF VIRGINIA
MAURICE W. WHITE
No. 040806
PROFESSIONAL ENGINEER

SCALE 1/4" = 1'

SHEET A1 OF 1 SHEETS

JOB NUMBER 130118

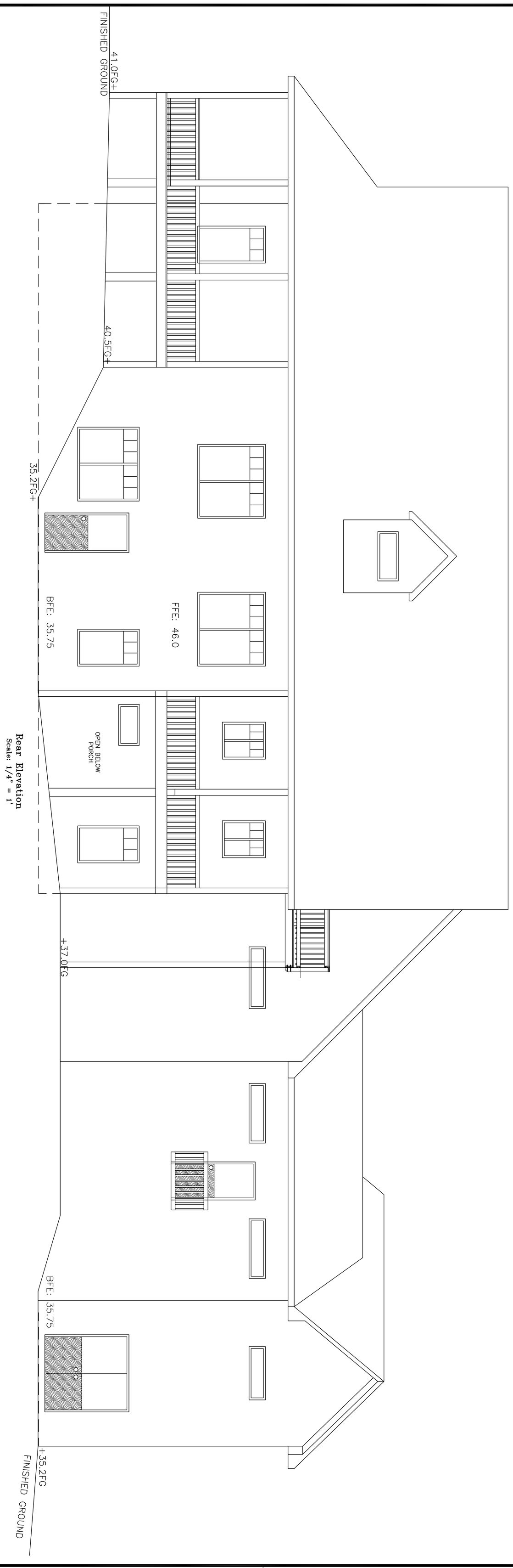

Rear Elevation
Scale: 1/4" = 1'

SCALE	1/4" = 1'
SHEET	A2
OF	1
SHEETS	
JOB NUMBER	130118

COMMONWEALTH OF VIRGINIA
MAURICE W. WHITE
No. 040806
PROFESSIONAL ENGINEER

DESIGNED BY M.W.W.	DATE 12/20/13
CHECKED BY M.W.W.	DATE 12/20/13
DRAWN BY M.W.W.	DATE 12/16/13
SURVEYED BY	DATE

Elevations

for Eric Kessler

Potomac Landing (Lot 75)

King Geroge County, Virginia

ALEXCOM & ASSOCIATES, INC.
GEOTECHNICAL / CIVIL AND STRUCTURAL ENGINEERS
11 DEBRUEN LANE
FREDERICKSBURG, VIRGINIA 22405
PHONE (540) 371-3157, FAX (540) 371-7920

SOIL DESIGN ENGINEERING

DATE	NO.	REVISION

p:\maurice\letter_d\year2013\dec_13\kessler_1dec13.dwg

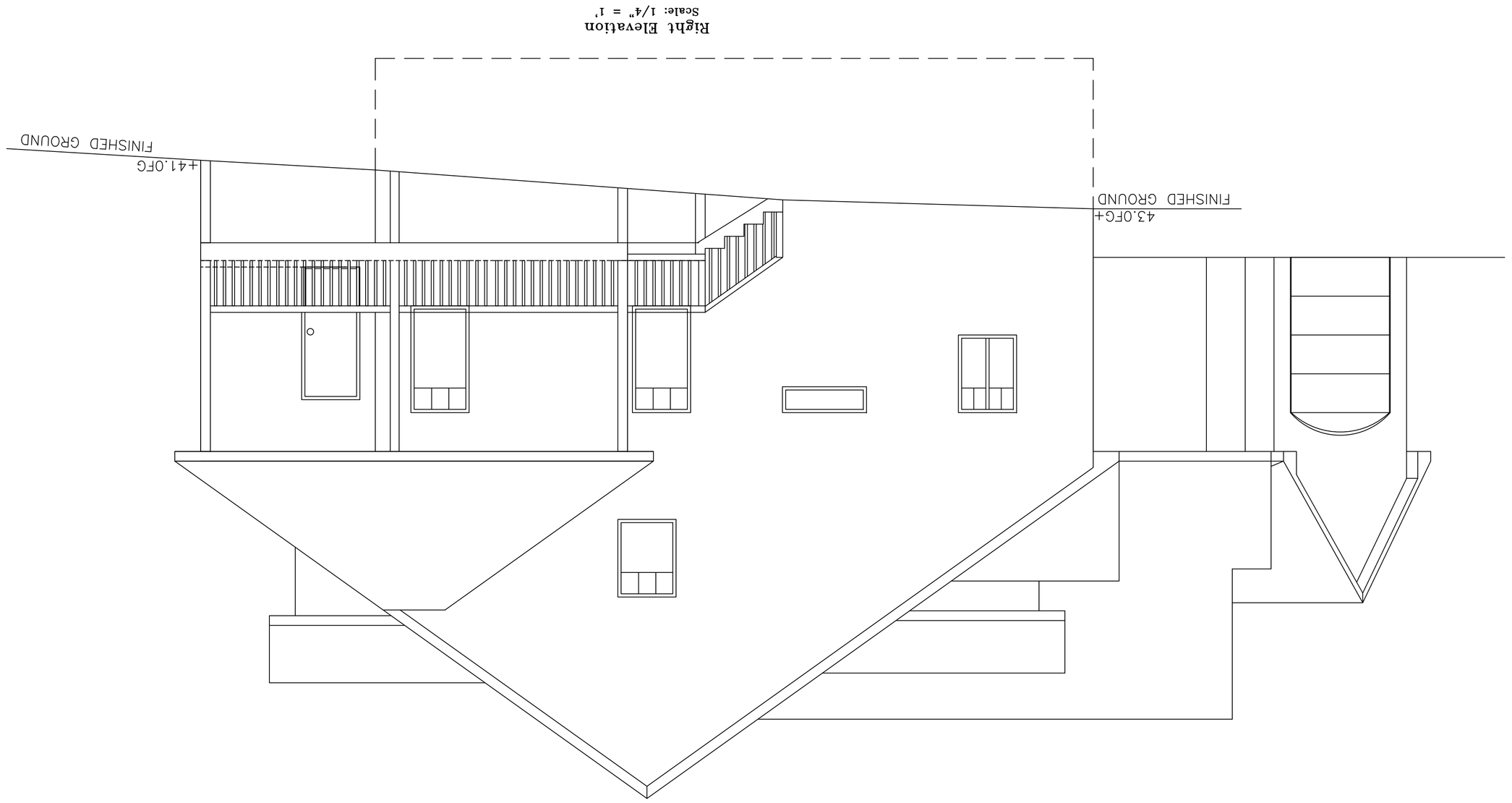

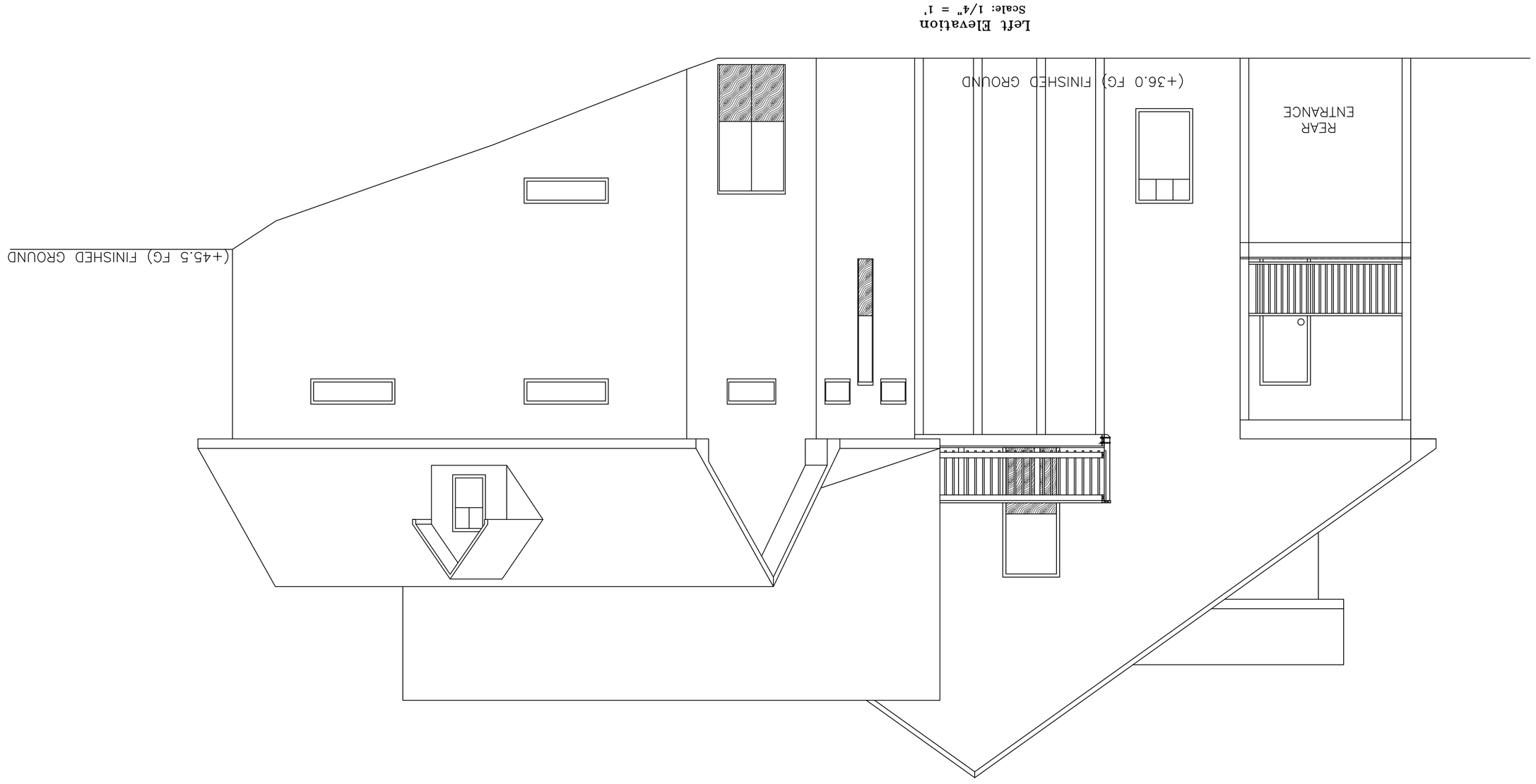

Elevations

for Eric Kessler

Potomac Landing (Lot 75)

King Geroge County, Virginia

ALEXCOM & ASSOCIATES, INC.

GEOTECHNICAL / CIVIL AND STRUCTURAL ENGINEERS

11 DEBRUEN LANE

FREDERICKSBURG, VIRGINIA 22405

PHONE (540) 371-3157, FAX (540) 371-7920

DESIGNED BY	M.W.W.
DATE	12/20/13
CHECKED BY	M.W.W.
DATE	12/20/13
DRAWN BY	M.W.W.
DATE	12/16/13
SURVEYED BY	
DATE	

COMMONWEALTH OF VIRGINIA
MAURICE W. WHITE
No. 040806
PROFESSIONAL ENGINEER

SCALE 1/4" = 1'

SHEET A3 OF 1 SHEETS

JOB NUMBER 130118

DATE	NO.	REVISION

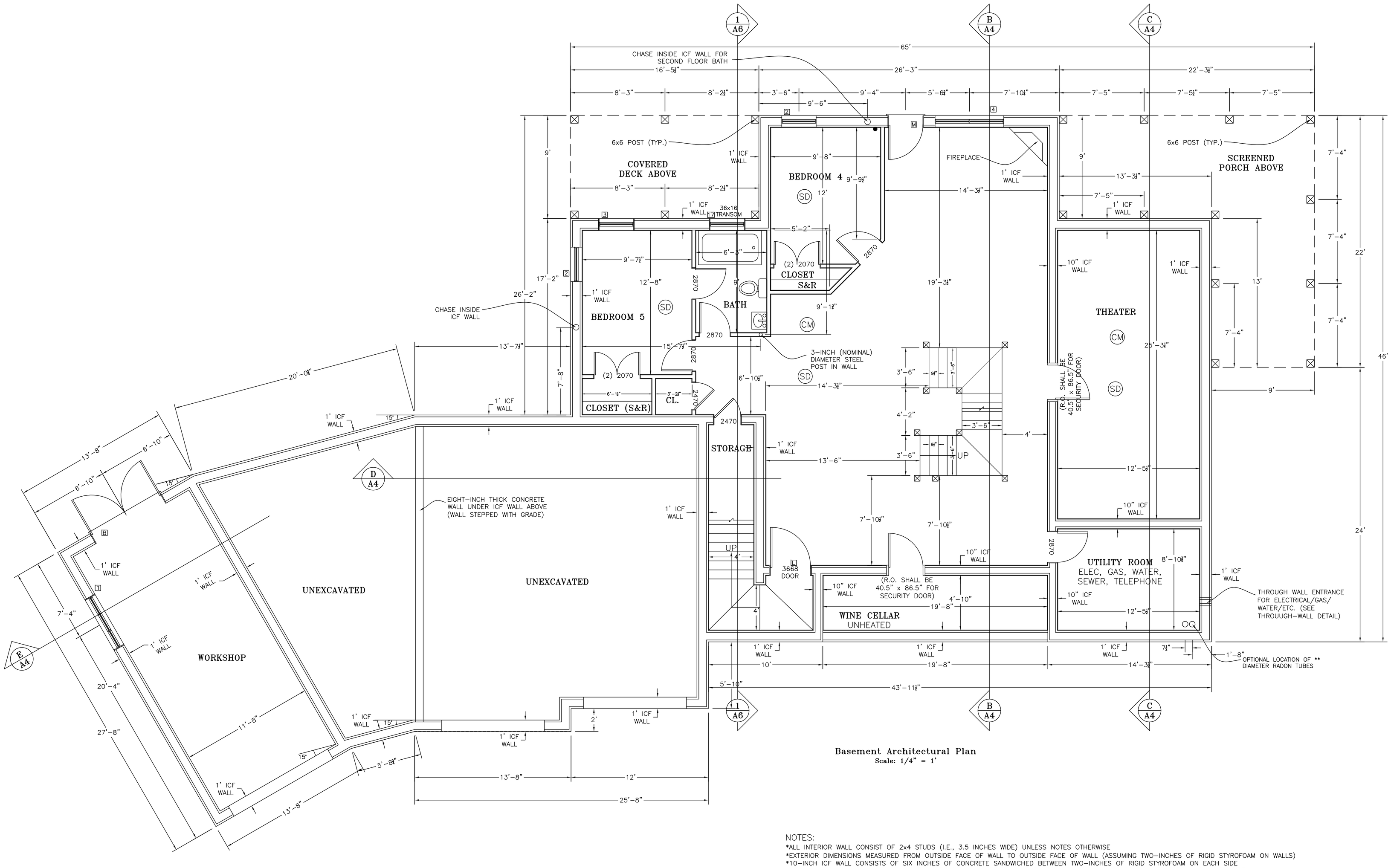

Basement Architectural Plan
Scale: 1/4" = 1'

NOTES:
*ALL INTERIOR WALL CONSIST OF 2x4 STUDS (I.E., 3.5 INCHES WIDE) UNLESS NOTES OTHERWISE
*EXTERIOR DIMENSIONS MEASURED FROM OUTSIDE FACE OF WALL TO OUTSIDE FACE OF WALL (ASSUMING TWO-INCHES OF RIGID STYROFOAM ON WALLS)
*10-INCH ICF WALL CONSISTS OF SIX INCHES OF CONCRETE SANDWICHED BETWEEN TWO-INCHES OF RIGID STYROFOAM ON EACH SIDE
*12-INCH ICF WALL CONSISTS OF EIGHT INCHES OF CONCRETE SANDWICHED BETWEEN TWO-INCHES OF RIGID STYROFOAM ON EACH SIDE.

DATE	NO.	REVISION

ALEXCOM & ASSOCIATES, INC.
GEOTECHNICAL / CIVIL AND STRUCTURAL ENGINEERS
11 DEBRUEN LANE
FREDERICKSBURG, VIRGINIA 22405
PHONE (540) 371-3157, FAX (540) 371-7920

Basement Arch. Plan
for Eric Kessler
Potomac Landing (Lot 75)
King Geroge County, Virginia

DESIGNED BY	DATE	CHECKED BY	DATE	DRAWN BY	DATE	SURVEYED BY	DATE
M.W.W.	12/20/13	M.W.W.	12/20/13	M.W.W.	12/16/13		

COMMONWEALTH OF VIRGINIA
MAURICE W. WHITE
No. 040806
PROFESSIONAL ENGINEER

SCALE 1/4" = 1'
SHEET A4 OF 1 SHEETS
JOB NUMBER 130118

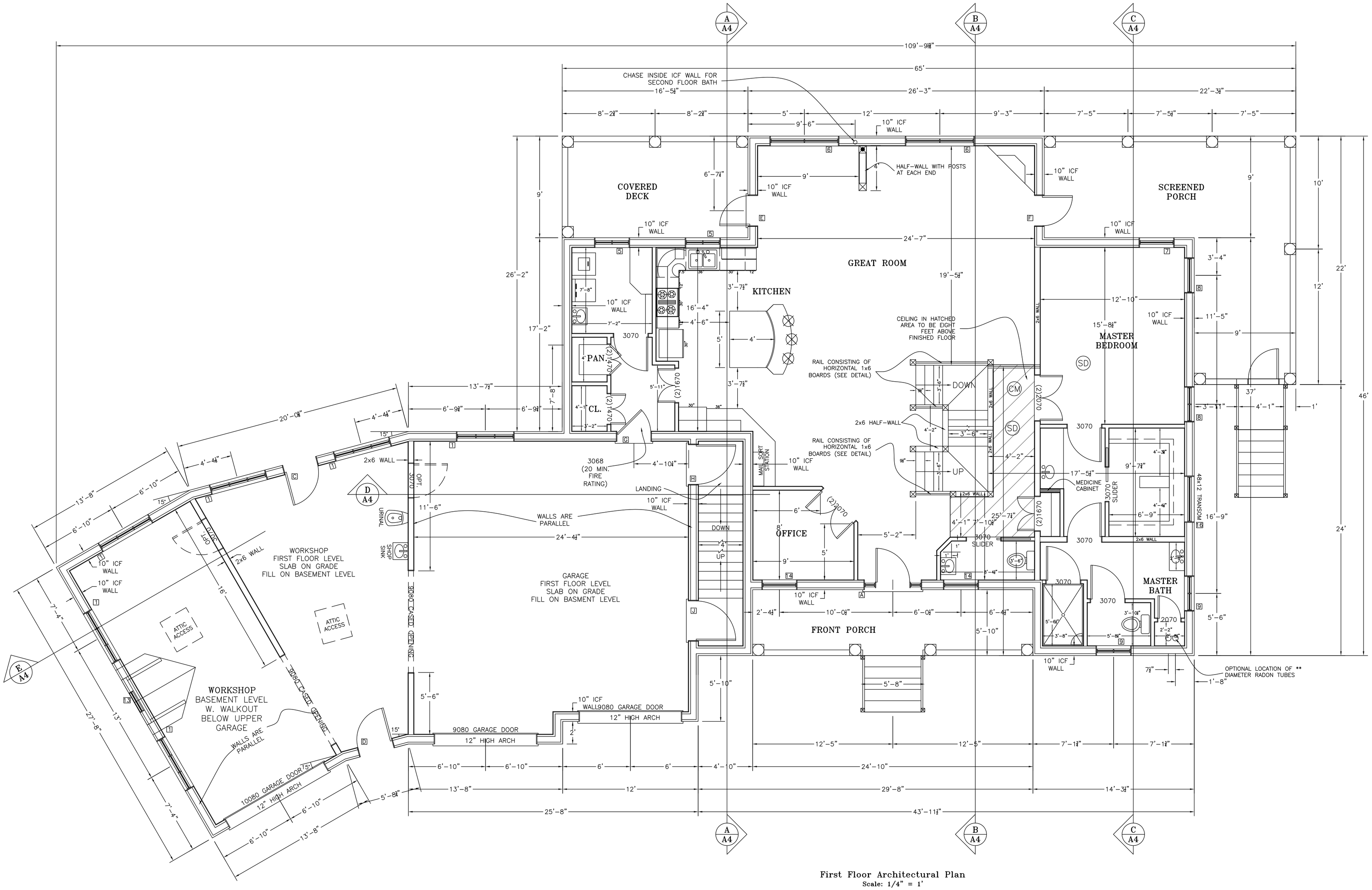

First Floor Architectural Plan
Scale: 1/4" = 1'

ALEXCOM & ASSOCIATES, INC.
GEOTECHNICAL / CIVIL AND STRUCTURAL ENGINEERS
11 DEBRUEN LANE
FREDERICKSBURG, VIRGINIA 22405
PHONE (540) 371-3157, FAX (540) 371-7920

DATE	NO.	REVISION

First Floor Arch. Plan
for Eric Kessler
Potomac Landing (Lot 75)
King Geroge County, Virginia

DESIGNED BY	DATE	CHECKED BY	DATE	DRAWN BY	DATE	SURVEYED BY	DATE
M.W.W.	12/20/13	M.W.W.	12/20/13	M.W.W.	12/16/13		

COMMONWEALTH OF VIRGINIA
MAURICE W. WHITE
No. 040806
PROFESSIONAL ENGINEER

SCALE 1/4" = 1'
SHEET A5 OF 1 SHEETS
JOB NUMBER 130118

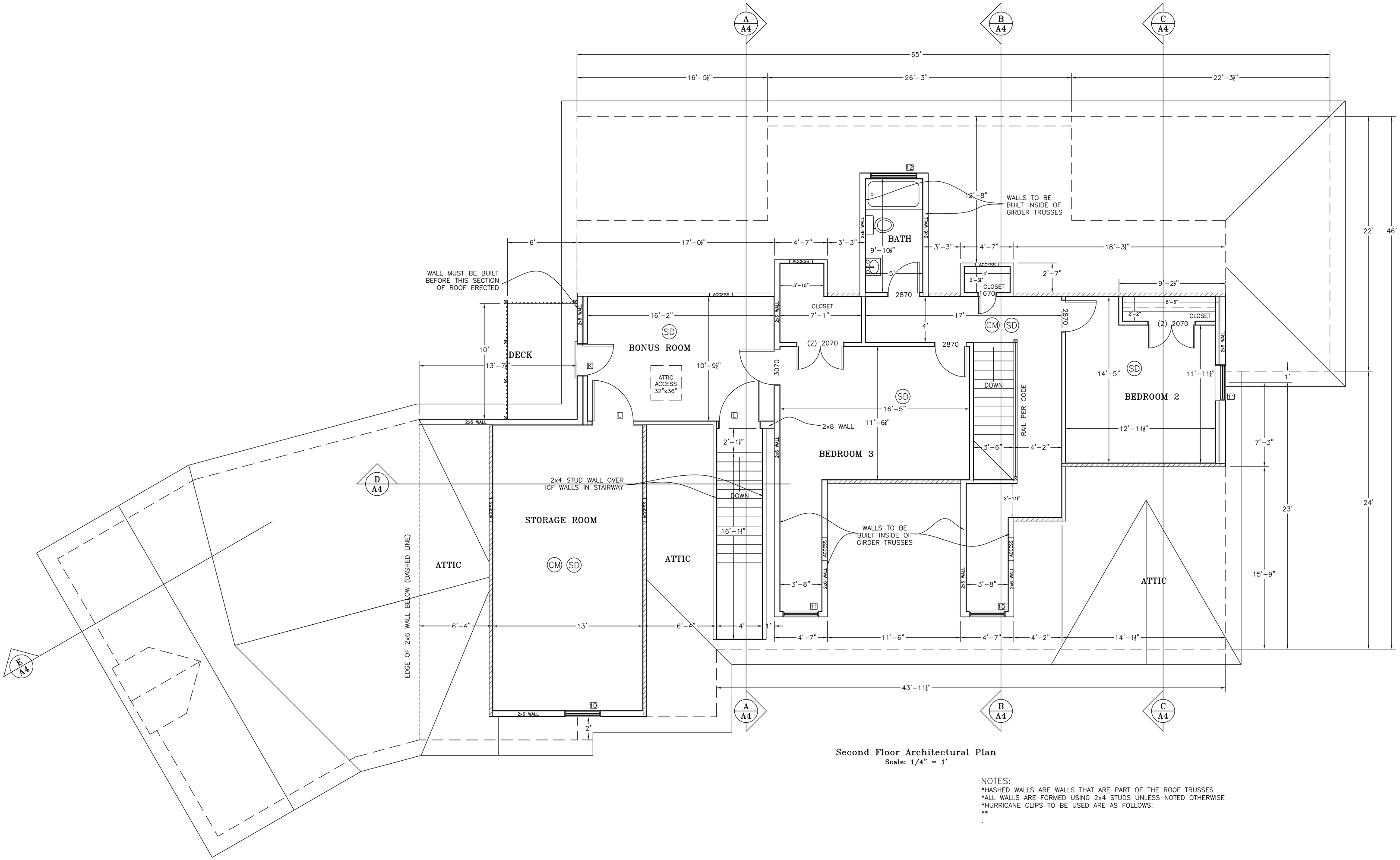

Second Floor Architectural Plan
Scale: 1/4" = 1'

NOTES:
*HASHED WALLS ARE WALLS THAT ARE PART OF THE ROOF TRUSSES
*ALL WALLS ARE FORMED USING 2x4 STUDS UNLESS NOTED OTHERWISE
*HURRICANE CLIPS TO BE USED ARE AS FOLLOWS:
**
.

DATE	NO.	REVISION

ALEXCOM & ASSOCIATES, INC.
GEOTECHNICAL / CIVIL AND STRUCTURAL ENGINEERS
11 DEBRUEN LANE
FREDERICKSBURG, VIRGINIA 22405
PHONE (540) 371-3157, FAX (540) 371-7920

Second Floor Arch. Plan

for Eric Kessler
Potomac Landing (Lot 75)
King Geroge County, Virginia

DESIGNED BY	DATE	CHECKED BY	DATE	DRAWN BY	DATE	SURVEYED BY	DATE
M.W.W.	12/20/13	M.W.W.	12/20/13	M.W.W.	12/16/13		

SCALE 1/4" = 1'
SHEET A6 OF 1 SHEETS
JOB NUMBER 130118

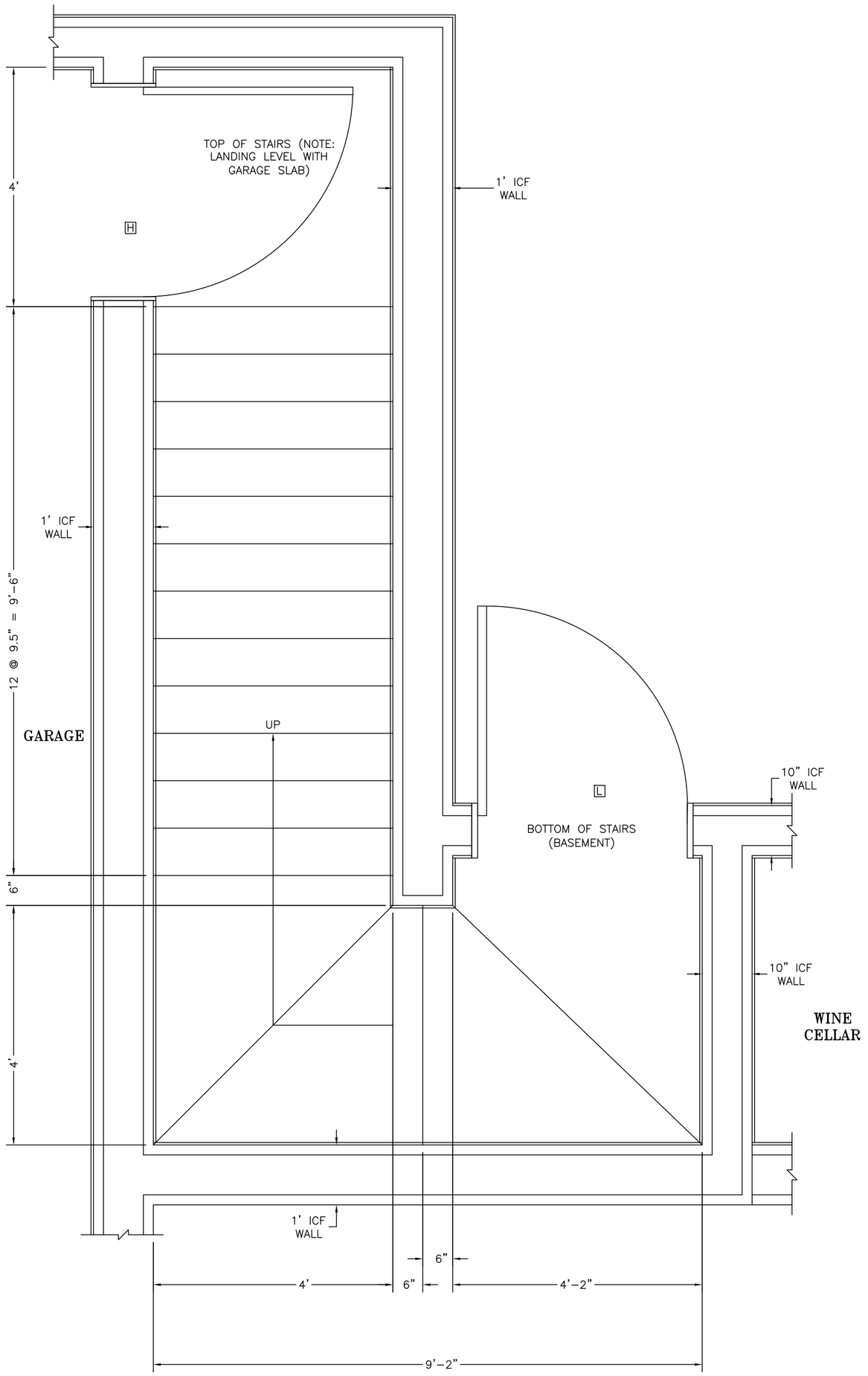

Stairs from Basement to Garage
(Adjacent to Garage and Wine Cellar)
Scale: 3/4" = 1'

NOTES:
*SIXTEEN (16) $7\frac{13}{16}$-INCH TALL RISERS
*FIFTEEN $9\frac{1}{2}$-INCH DEEP TREADS (EXCEPT WINDER TREADS)
*FOUR-FOOT WIDE TREADS (EXCEPT WINDER TREADS)
*ONLY BASEMENT WALLS SHOWN EXCEPT AT TOP OF STAIRS (FIRST FLOOR DOORS SHOWN TO EMPHASIZE THAT LANDING LEVEL WITH GARAGE FLOOR).

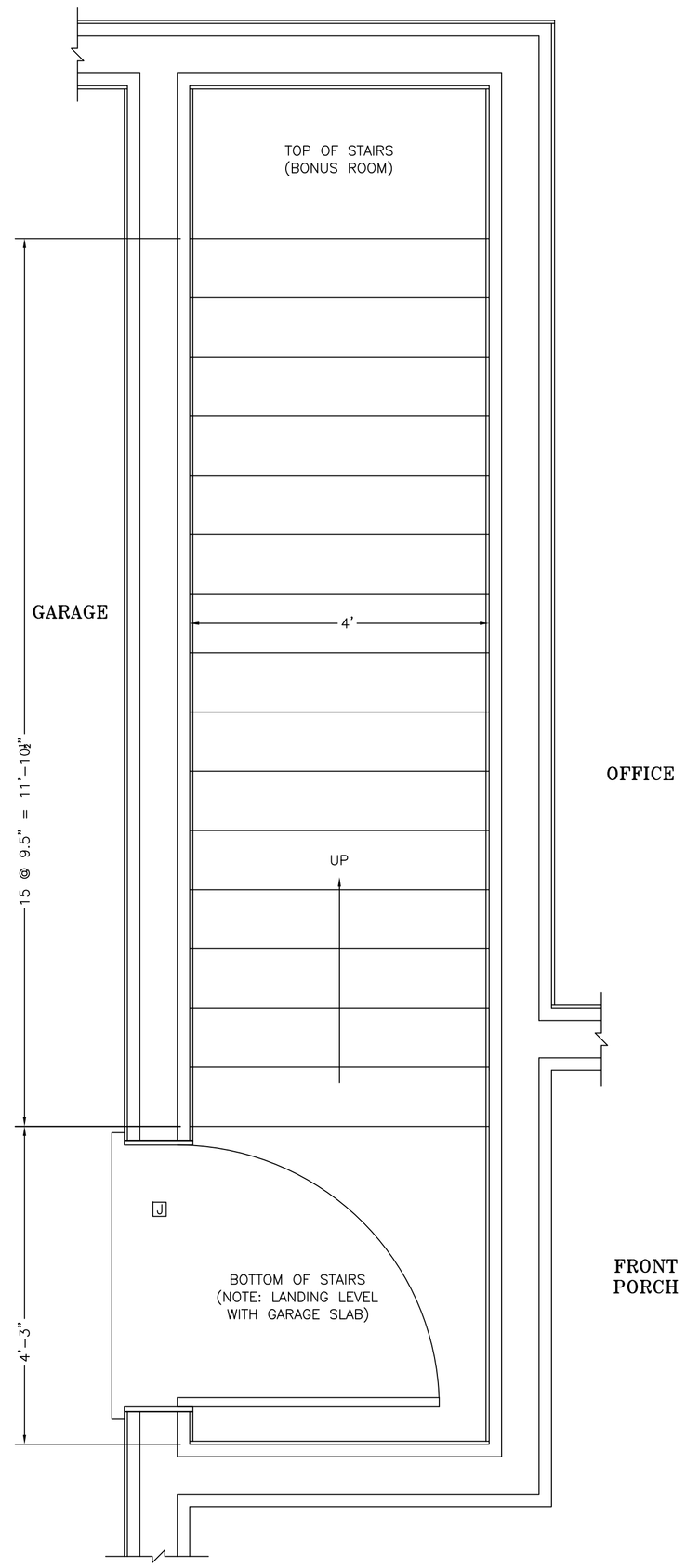

Stairs from Garage to Bonus Room
(Adjacent to Garage Front Porch)
Scale: 3/4" = 1'

NOTES:
*SIXTEEN (16) RISERS, EACH APPROX. $8\frac{3}{4}$-INCH TALL (MUST BE FIELD DETERMINED GIVEN SLOPE OF GRAGE SLAB)
*FIFTEEN $9\frac{1}{2}$-INCH DEEP TREADS
*FOUR-FOOT WIDE TREADS
*ONLY FIRST FLOOR WALLS SHOWN.

DATE	NO.	REVISION

ALEXCOM & ASSOCIATES, INC.
GEOTECHNICAL / CIVIL AND STRUCTURAL ENGINEERS
11 DEBRUEN LANE
FREDERICKSBURG, VIRGINIA 22405
PHONE (540) 371-3157, FAX (540) 371-7920

Stair Details
for Eric Kessler
Potomac Landing (Lot 75)
King Geroge County, Virginia

DESIGNED BY M.W.W.	DATE 12/20/13	
CHECKED BY M.W.W.	DATE 12/20/13	
DRAWN BY M.W.W.	DATE 12/16/13	
SURVEYED BY	DATE	

SCALE 1/4" = 1'
SHEET A7 OF 1 SHEETS
JOB NUMBER 130118

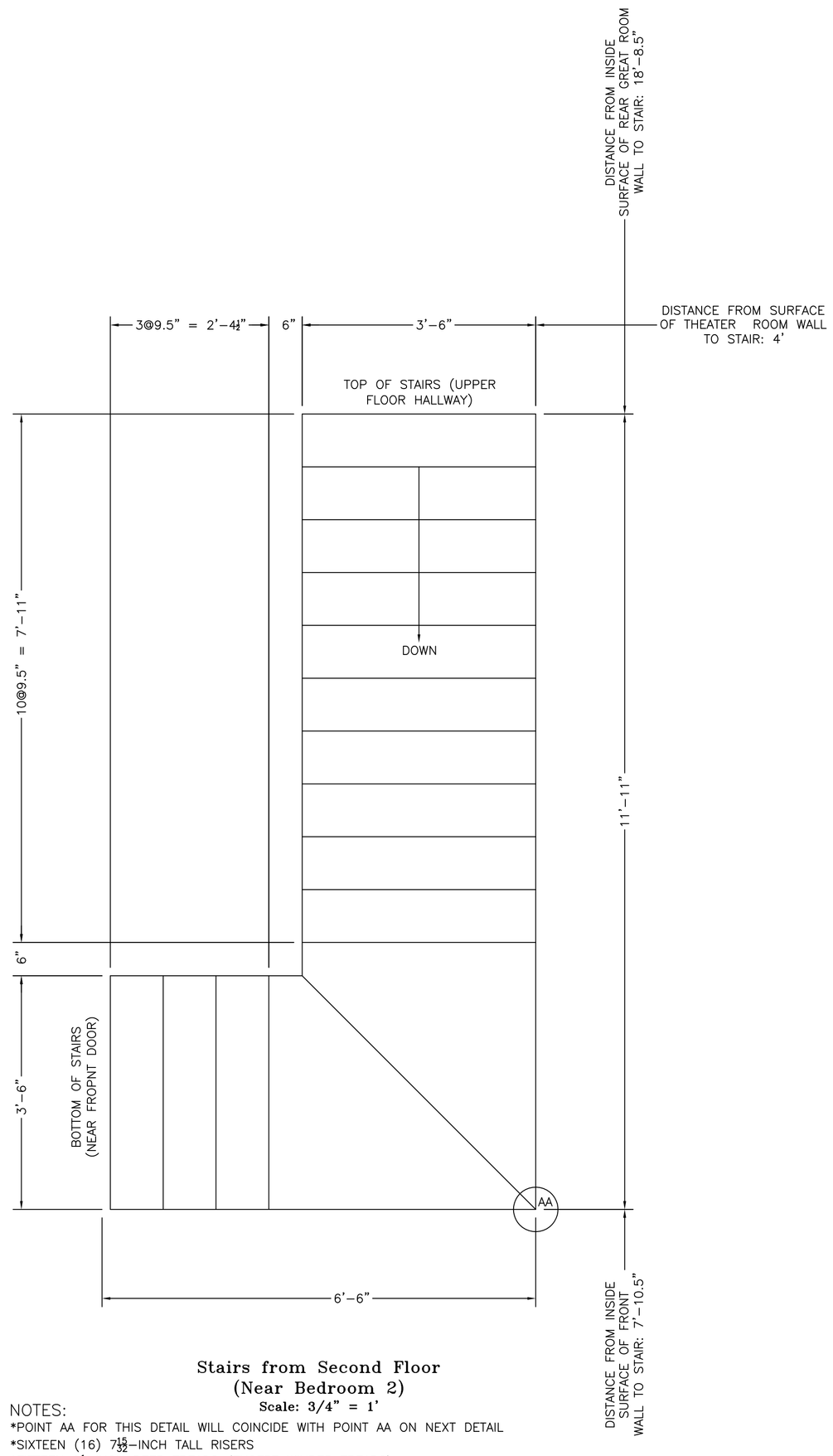

Stairs from Second Floor
(Near Bedroom 2)
Scale: 3/4" = 1'

NOTES:
*POINT AA FOR THIS DETAIL WILL COINCIDE WITH POINT AA ON NEXT DETAIL
*SIXTEEN (16) $7\frac{15}{32}$–INCH TALL RISERS
*FIFTEEN $9\frac{1}{2}$–INCH DEEP TREADS (EXCEPT WINDER TREADS)
*3'–6" WIDE TREADS (EXCEPT WINDER TREADS)
*POSTS NOT SHOWN FOR CLARITY.

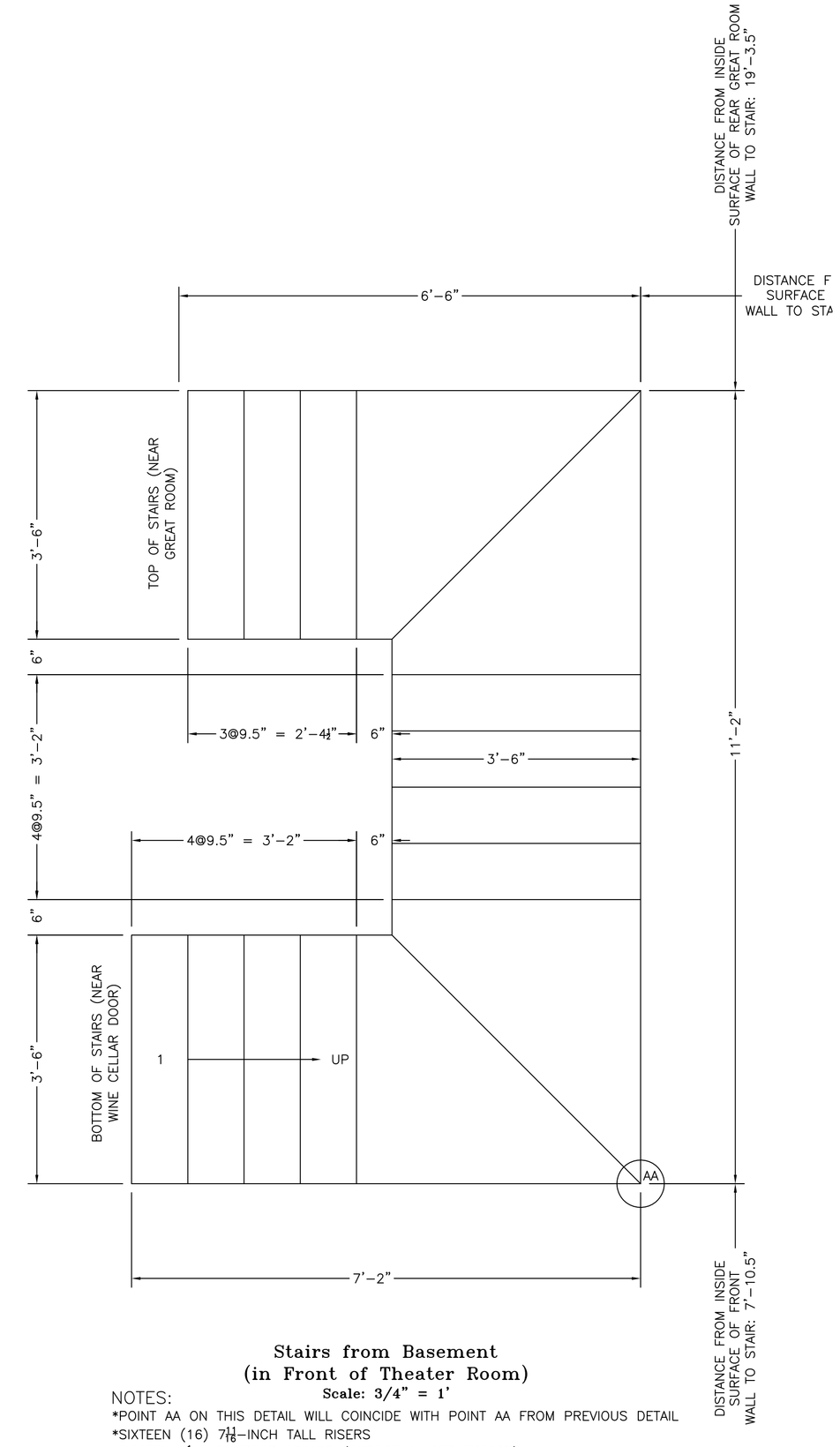

Stairs from Basement
(in Front of Theater Room)
Scale: 3/4" = 1'

NOTES:
*POINT AA ON THIS DETAIL WILL COINCIDE WITH POINT AA FROM PREVIOUS DETAIL
*SIXTEEN (16) $7\frac{11}{16}$–INCH TALL RISERS
*FIFTEEN $9\frac{1}{2}$–INCH DEEP TREADS (EXCEPT WINDER TREADS)
*3'–6" WIDE TREADS (EXCEPT WINDER TREADS)
*POSTS NOT SHOWN FOR CLARITY.

DATE	NO.	REVISION

p:\mecad\Mike_Auger2013\Mike_13\Lander_Sale13.dwg

ALEXCOM & ASSOCIATES, INC.
GEOTECHNICAL / CIVIL AND
STRUCTURAL ENGINEERS
11 DEBRUEN LANE
FREDERICKSBURG, VIRGINIA 22405
PHONE (540) 371-3157, FAX (540) 371-7920

Stair Details
for Eric Kessler
Potomac Landing (Lot 75)
King Geroge County, Virginia

DESIGNED BY M.W.W.	DATE 12/20/13		
CHECKED BY M.W.W.	DATE 12/20/13		
DRAWN BY M.W.W.	DATE 12/16/13		
SURVEYED BY	DATE		

SCALE 1/4" = 1'
SHEET A8 OF 1 SHEETS
JOB NUMBER 130118

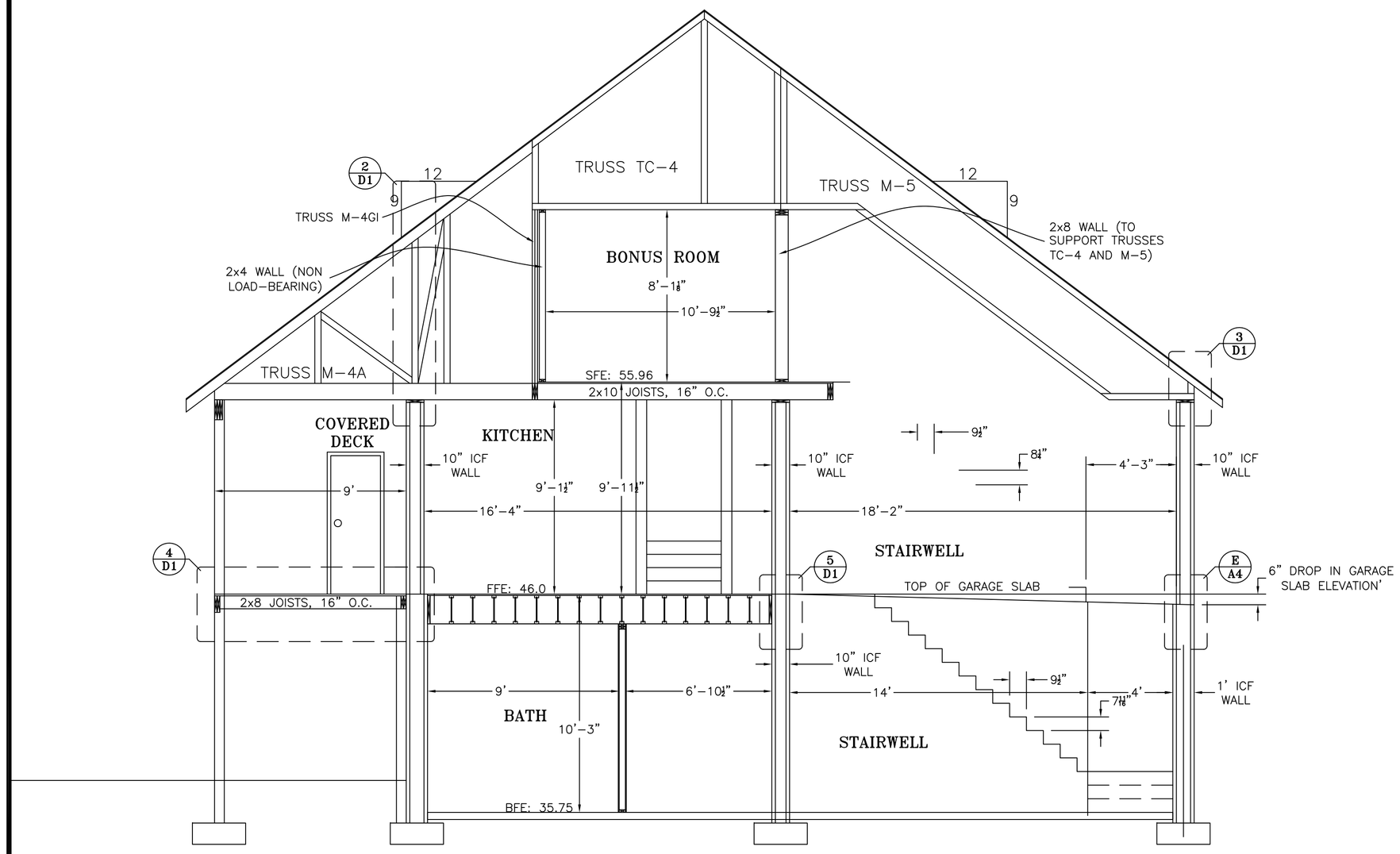

1 A9 Building Section Through Kitchen
Scale: 1/4" = 1'

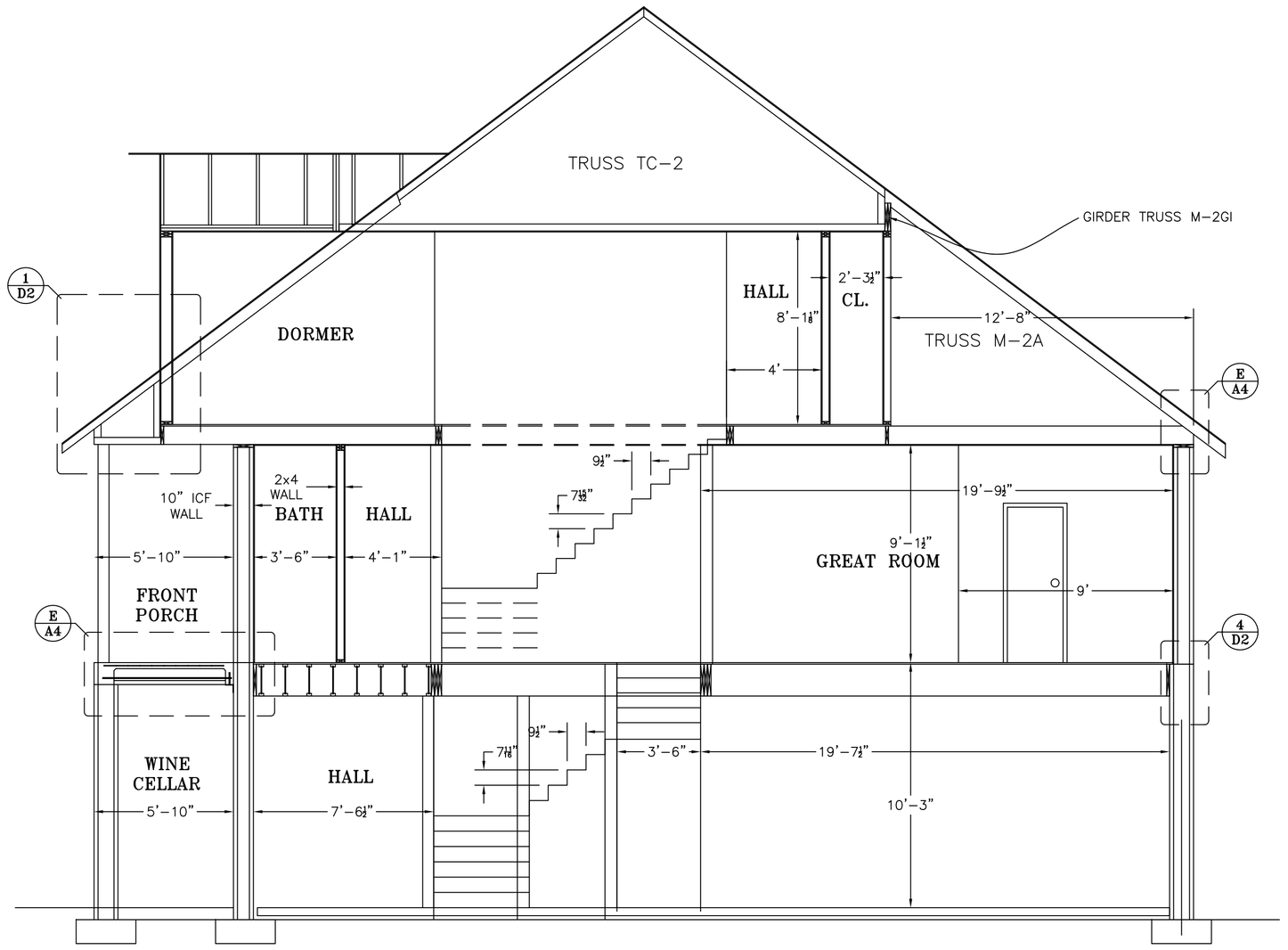

2 A6 Building Section Through Main Stairs
(i.e., ~~Stairs Adjacent to Great~~ Room)
Scale: 1/4" = 1'

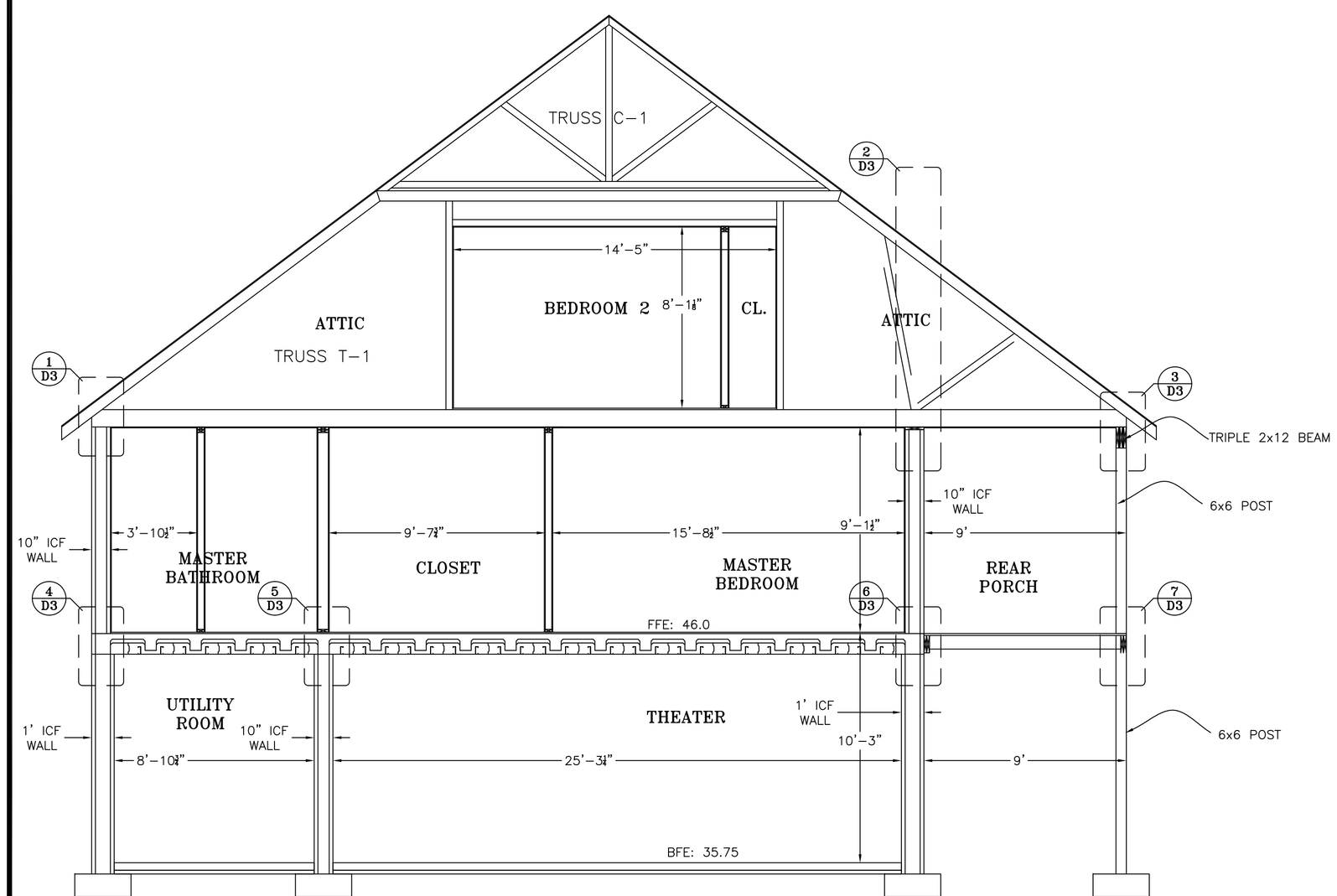

C A4 Building Section Though
~~Master Bedroom~~
Scale: 1/4" = 1'

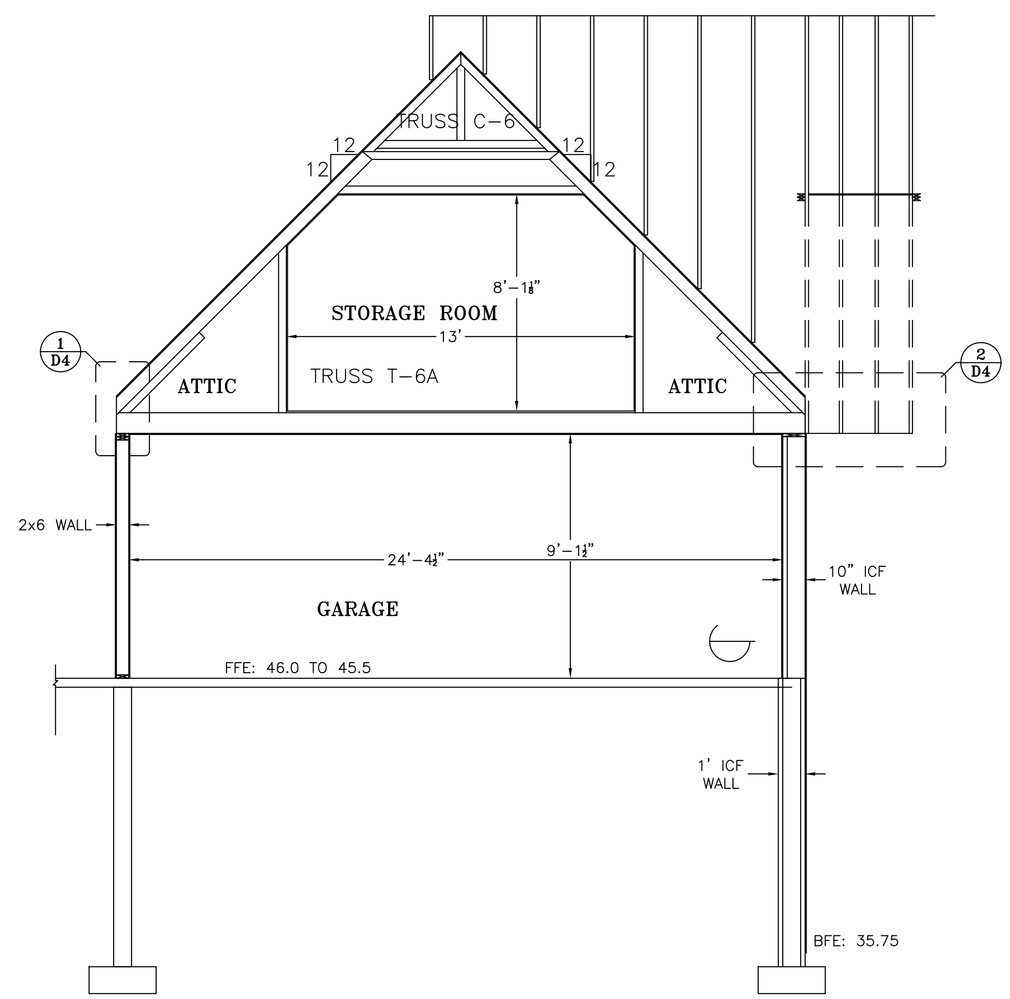

D A Building Section Though Larger Garage
Scale: 1/4" = 1'

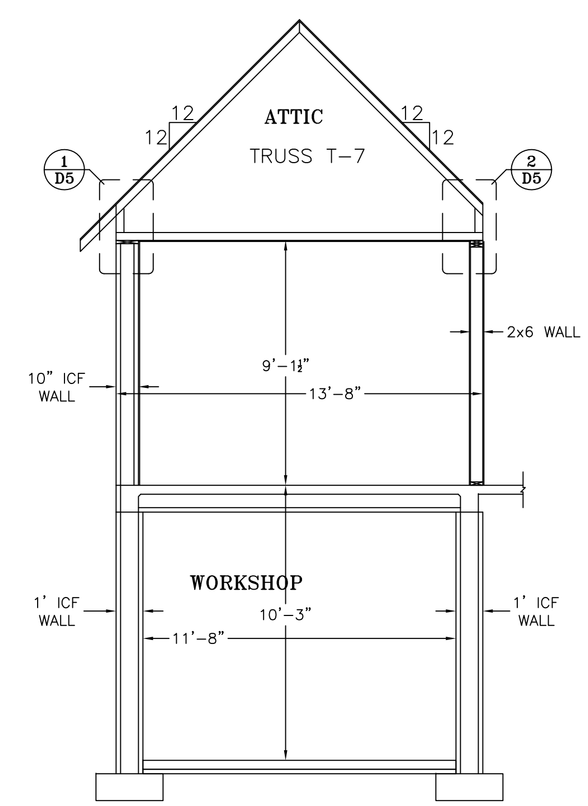

E A4 Building Section Though Workshop
Scale: 1/4" = 1'

DATE	NO.	REVISION

ALEXCOM & ASSOCIATES, INC.
GEOTECHNICAL / CIVIL AND STRUCTURAL ENGINEERS
11 DEBRUEN LANE
FREDERICKSBURG, VIRGINIA 22405
PHONE (540) 371-3157, FAX (540) 371-7920

Full Residence Sections

for Eric Kessler

Potomac Landing (Lot 75)

King Geroge County, Virginia

DESIGNED BY	DATE
M.W.W.	12/20/13
CHECKED BY	DATE
M.W.W.	12/20/13
DRAWN BY	DATE
M.W.W.	12/16/13
SURVEYED BY	DATE

COMMONWEALTH OF VIRGINIA
MAURICE W. WHITE
No. 040806
PROFESSIONAL ENGINEER

SCALE 1/4" = 1'

SHEET A9 OF 1 SHEETS

JOB NUMBER 130118

ALL WINDOWS ARE TO BE
CASEMENT–TYPE, 24" OFF FLOOR.

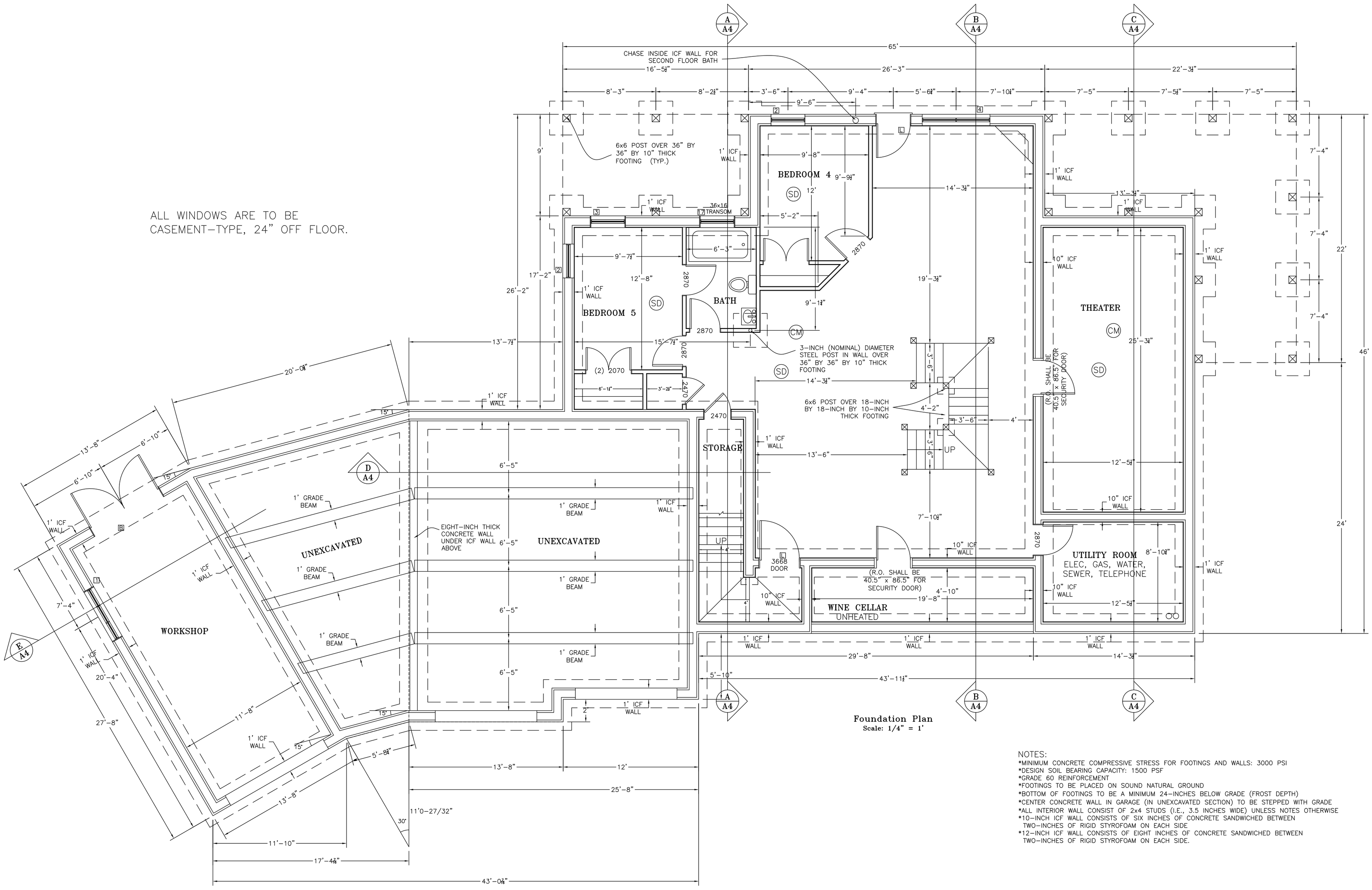

Foundation Plan
Scale: 1/4" = 1'

NOTES:
*MINIMUM CONCRETE COMPRESSIVE STRESS FOR FOOTINGS AND WALLS: 3000 PSI
*DESIGN SOIL BEARING CAPACITY: 1500 PSF
*GRADE 60 REINFORCEMENT
*FOOTINGS TO BE PLACED ON SOUND NATURAL GROUND
*BOTTOM OF FOOTINGS TO BE A MINIMUM 24–INCHES BELOW GRADE (FROST DEPTH)
*CENTER CONCRETE WALL IN GARAGE (IN UNEXCAVATED SECTION) TO BE STEPPED WITH GRADE
*ALL INTERIOR WALL CONSIST OF 2x4 STUDS (I.E., 3.5 INCHES WIDE) UNLESS NOTES OTHERWISE
*10–INCH ICF WALL CONSISTS OF SIX INCHES OF CONCRETE SANDWICHED BETWEEN TWO–INCHES OF RIGID STYROFOAM ON EACH SIDE
*12–INCH ICF WALL CONSISTS OF EIGHT INCHES OF CONCRETE SANDWICHED BETWEEN TWO–INCHES OF RIGID STYROFOAM ON EACH SIDE.

DATE	NO.	REVISION

ALEXCOM & ASSOCIATES, INC.
GEOTECHNICAL / CIVIL AND STRUCTURAL ENGINEERS
11 DEBRUEN LANE
FREDERICKSBURG, VIRGINIA 22405
PHONE (540) 371–3157, FAX (540) 371–7920

Foundation Plan
for Eric Kessler
Potomac Landing (Lot 75)
King Geroge County, Virginia

DESIGNED BY	DATE	CHECKED BY	DATE	DRAWN BY	DATE	SURVEYED BY	DATE
M.W.W.	12/20/13	M.W.W.	12/20/13	M.W.W.	12/16/13		

COMMONWEALTH OF VIRGINIA
MAURICE W. WHITE
No. 040806
PROFESSIONAL ENGINEER

SCALE 1/4" = 1'
SHEET S1 OF 1 SHEETS
JOB NUMBER 130118

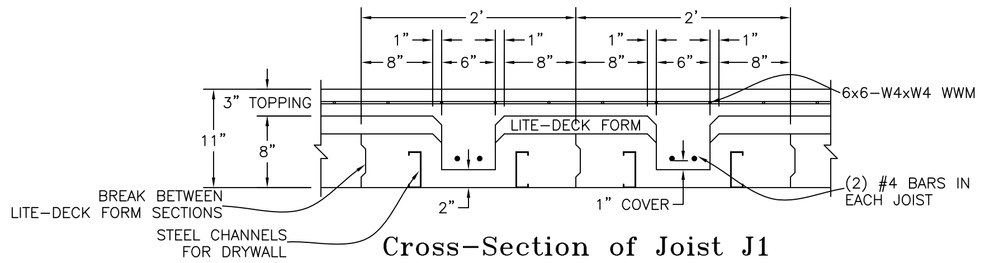

Cross-Section of Joist J1
Scale: 1" = 1'

Cross-Section of Joist J2
Scale: 1" = 1'

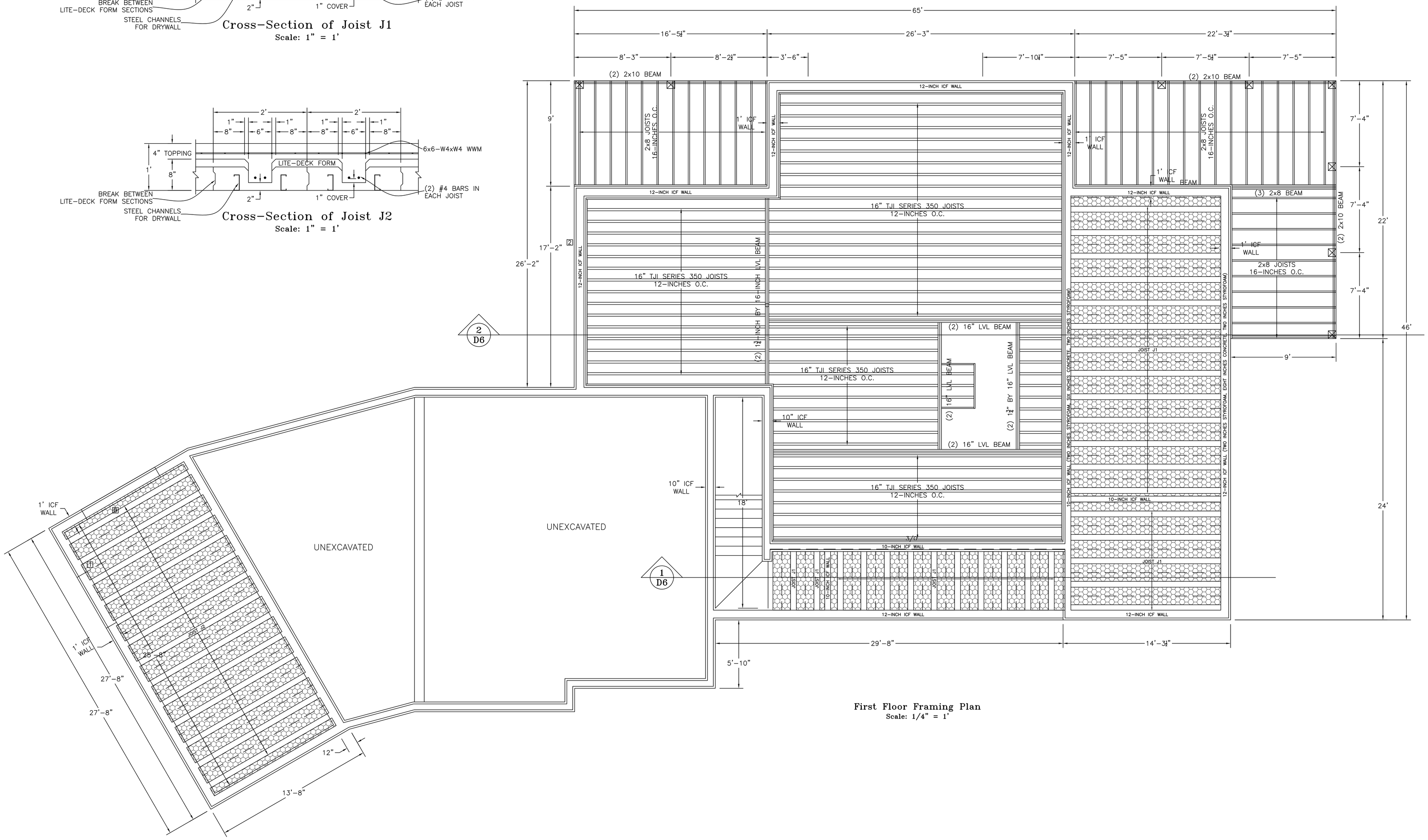

First Floor Framing Plan
Scale: 1/4" = 1'

DATE	NO.	REVISION

ALEXCOM & ASSOCIATES, INC.
GEOTECHNICAL / CIVIL AND STRUCTURAL ENGINEERS
11 DEBRUEN LANE
FREDERICKSBURG, VIRGINIA 22405
PHONE (540) 371-3157, FAX (540) 371-7920

First Floor Framing Plan

for Eric Kessler

Potomac Landing (Lot 75)

King George County, Virginia

DESIGNED BY	DATE	CHECKED BY	DATE	DRAWN BY	DATE	SURVEYED BY	DATE
M.W.W.	12/20/13	M.W.W.	12/20/13	M.W.W.	12/16/13		

SCALE: SEE PLANS

SHEET: S2 OF 1 SHEETS

JOB NUMBER: 130118

NOTES:
*ONLY GIRDER TRUSSES AND FIRST FLOOR FRAMING INDEPENDENT OF TRUSSES SHOWN.

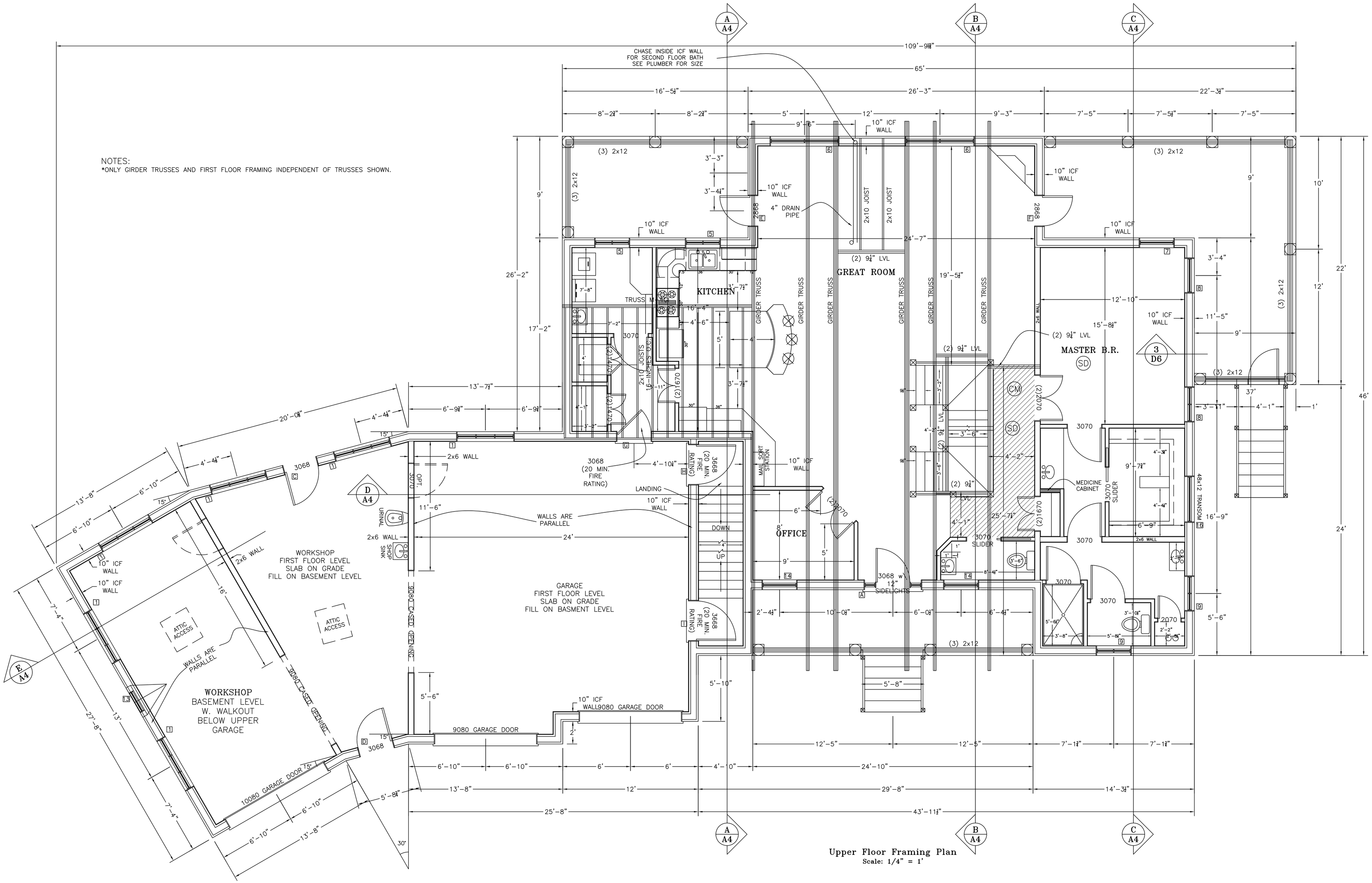

Upper Floor Framing Plan
Scale: 1/4" = 1'

ALEXCOM & ASSOCIATES, INC.
GEOTECHNICAL / CIVIL AND STRUCTURAL ENGINEERS
11 DEBRUEN LANE
FREDERICKSBURG, VIRGINIA 22405
PHONE (540) 371-3157, FAX (540) 371-7920

Upper Floor Framing Plan
for Eric Kessler
Potomac Landing (Lot 75)
King Geroge County, Virginia

DATE	NO.	REVISION

DESIGNED BY	DATE	CHECKED BY	DATE	DRAWN BY	DATE	SURVEYED BY	DATE
M.W.W.	12/20/13	M.W.W.	12/20/13	M.W.W.	12/16/13		

SCALE 1/4" = 1'
SHEET S3 OF 1 SHEETS
JOB NUMBER 130118

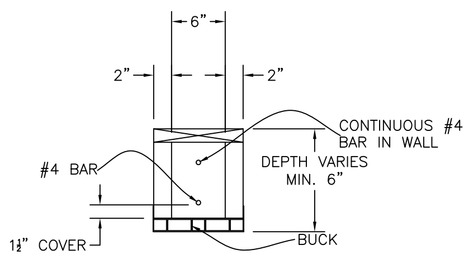

Section for Header H1
Scale: 1" = 1'

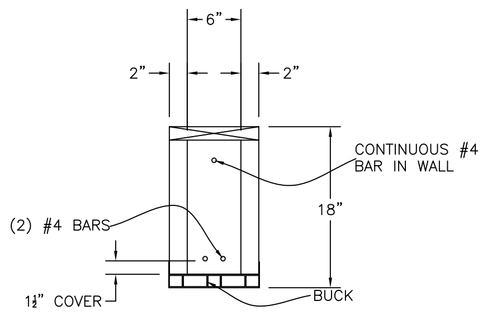

Section for Header H2
Scale: 1" = 1'

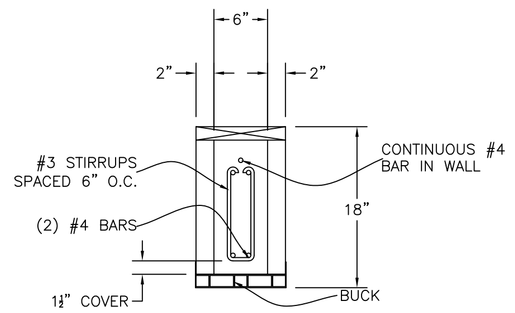

Section for Header H3
Scale: 1" = 1'

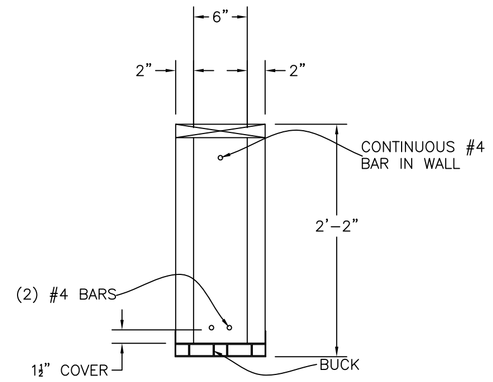

Section for Header H4
Scale: 1" = 1'

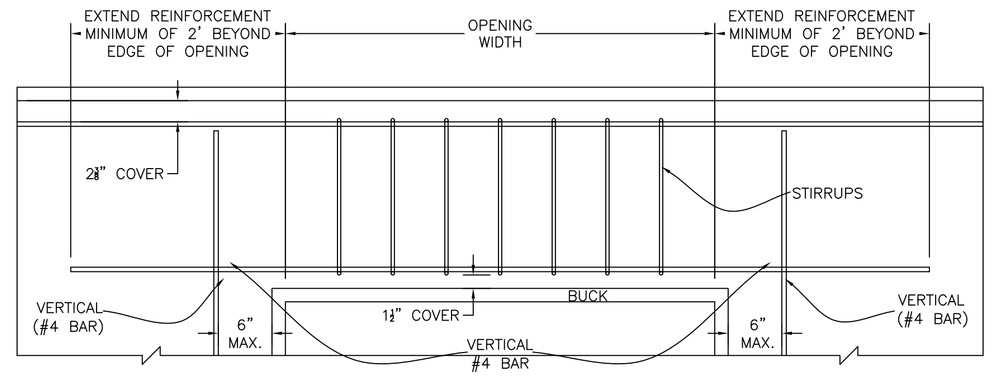

Gerneral Elevation Section for First Floor Headers
Scale: 1" = 1'

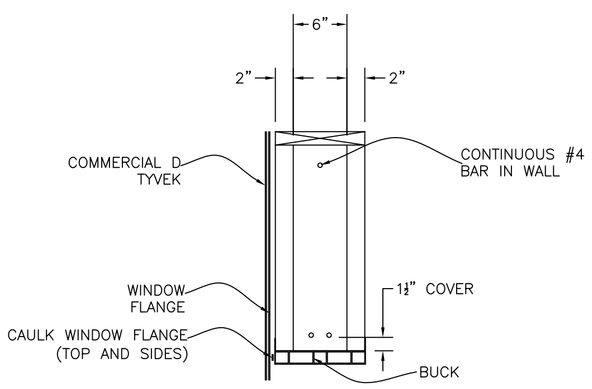

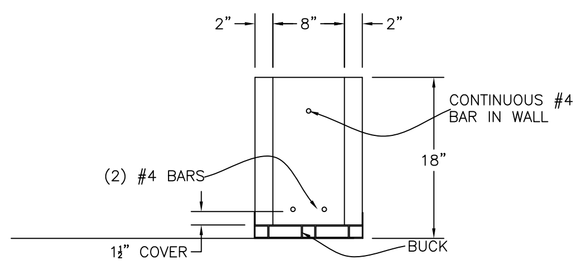

Section for Header H5
Scale: 1" = 1'

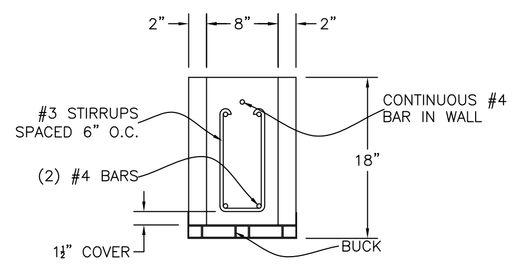

Section for Header H6
Scale: 1" = 1'

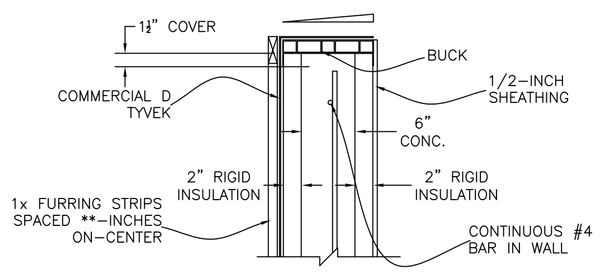

Detail at Window Openings
Scale: 1" = 1'

NOTES:
*USE CAP STAPLES TO ATTACH TYVEK TO WALL

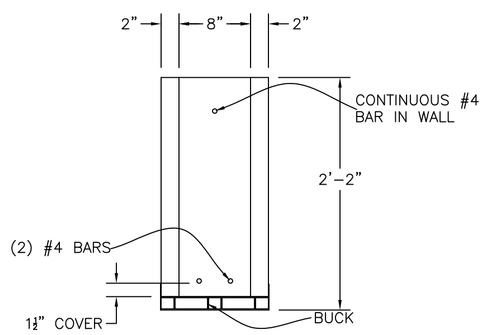

Section for Header H7
Scale: 1" = 1'

EXTERIOR DOOR SCHEDULE

DOOR OPENING	DOOR SIZE	ROUGH OPENING SIZE	HEADER	DESCRIPTION
A	3068 DOOR WITH 12-INCH WIDE SIELIGHTS	64⅜-INCHES BY 82½-INCHES		MASONITE BELLEVILLE OAK ENTRY, GEORGIAN GLASS, MULTIPOINT LOCK, STAINED
B	7068 DOOR	87⅛-INCHES BY 82½-INCHES		STEEL 6 PANEL, FRENCH DOUBLE, INSWING (BELOW GARAGE)
C	3068 DOOR	38⅜-INCHES BY 82½-INCHES		HALF-VIEW WITH LOW E GLASS; RIGHT-HAND INSWING
D	3068 DOOR	38⅜-INCHES BY 82½-INCHES		GEORGIAN GLASS, TWO PANEL CAMBERTOP, STAINED; RIGHT-HAND INSWING
E	2868 DOOR	33⅝-INCHES BY 81½-INCHES		FULL-VIEW WITH LOW E GLASS; LEFT-HAND OUTSWING
F	2868 DOOR	33⅝-INCHES BY 81½-INCHES		FULL-VIEW WITH LOW E GLASS; RIGHT-HAND OUTSWING
G	3068 DOOR	38⅜-INCHES BY 82½-INCHES		6 PANEL FIRE DOOR (I.E., MIN. 20 MIN. FIRE-RATING); LEFT-HAND INSWING
H	3668 DOOR	44⅜-INCHES BY 82½-INCHES		STEEL 6 PANEL FIRE DOOR (I.E., MIN. 20 MIN. FIRE-RATING); RIGHT-HAND INSWING
J	3668 DOOR	44⅜-INCHES BY 82½-INCHES		STEEL 6 PANEL FIRE DOOR (I.E., MIN. 20 MIN. FIRE-RATING); RIGHT-HAND INSWING
K	2868 DOOR	33⅝-INCHES BY 82½-INCHES		
L	3668 DOOR	44⅜-INCHES BY 82½-INCHES		
M	3068 DOOR	38⅜-INCHES BY 82½-INCHES		HALF-VIEW WITH LOW E GLASS; RIGHT-HAND INSWING

NOTES:
*THREE OF DOOR L PRESENT IN HOUSE; ONLY ONE OF ALL OTHER DOORS PRESENT
*DOOR SIZES AND ** BASED ON **

WINDOW SCHEDULE

WINDOW OPENING	DOOR SIZE	HEADER	DESCRIPTION
1	5014		CASEMENT TRANSOM, NO GRIDS (GARAGE, BASEMENT GARAGE)
2	3050		CASEMENT RH (LOWER LEVEL BR4, BR5)
3	3050		CASEMENT LH (LOWER LEVEL BR5)
4	6050		TWIN CASEMENT PICTURE (LOWER LEVEL REC. ROOM)
5	3040		TWIN CASEMENT (KITCHEN, LAUNDRY)
6	6056		TWIN CASEMENT PICTURE (GREAT ROOM)
7	3056		CASEMENT RH (MASTER BEDROOM)
8	3056		CASEMENT LH (MASTER BEDROOM)
9	3036		TWIN CASEMENT (MASTER BATHROOM)
10	3040		CASEMENT LH (STORAGE ROOM)
11	3040		CASEMENT LH (BR2, HALL DORMER, DORMER BR3)
12	4018		AWNING, NO GRIDS OBSCURE GLASS, TEMPERED (SECOND FLOOR BATH)
13	2030		CASEMENT PICTURE (THIRD GARAGE DORMER)
14	3056		TWIN CASEMENT (FIRST FLOOR OFFICE, GUEST BATH)
15	3040		CASEMENT RH (UPSTAIRS HALL DORMER)
16	4010		TRANSOM DIRECT SET, OBSCURE GLASS (FIRST FLOOR MASTER BATH CLOSET)
17	3014		TRANSOM DIRECT SET, OBSCURE GLASS, TEMPERED (BASEMENT BATH)

NOTES:
*THREE OF DOOR L PRESENT IN HOUSE; ONLY ONE OF ALL OTHER DOORS PRESENT
*DOOR SIZES AND ** BASED ON **
*WINDOW SIZES SHOWN ARE ROUGH OPENING SIZES.

DATE	NO.	REVISION

ALEXCOM & ASSOCIATES, INC.
GEOTECHNICAL / CIVIL AND
STRUCTURAL ENGINEERS
11 DEBRUEN LANE
FREDERICKSBURG, VIRGINIA 22405
PHONE (540) 371-3157, FAX (540) 371-7920

Headers
for Eric Kessler
Potomac Landing (Lot 75)
King Geroge County, Virginia

DESIGNED BY M.W.W.	DATE 12/20/13	
CHECKED BY M.W.W.	DATE 12/20/13	
DRAWN BY M.W.W.	DATE 12/16/13	
SURVEYED BY	DATE	

SCALE 1/4" = 1'
SHEET S4 OF 1 SHEETS
JOB NUMBER 130118

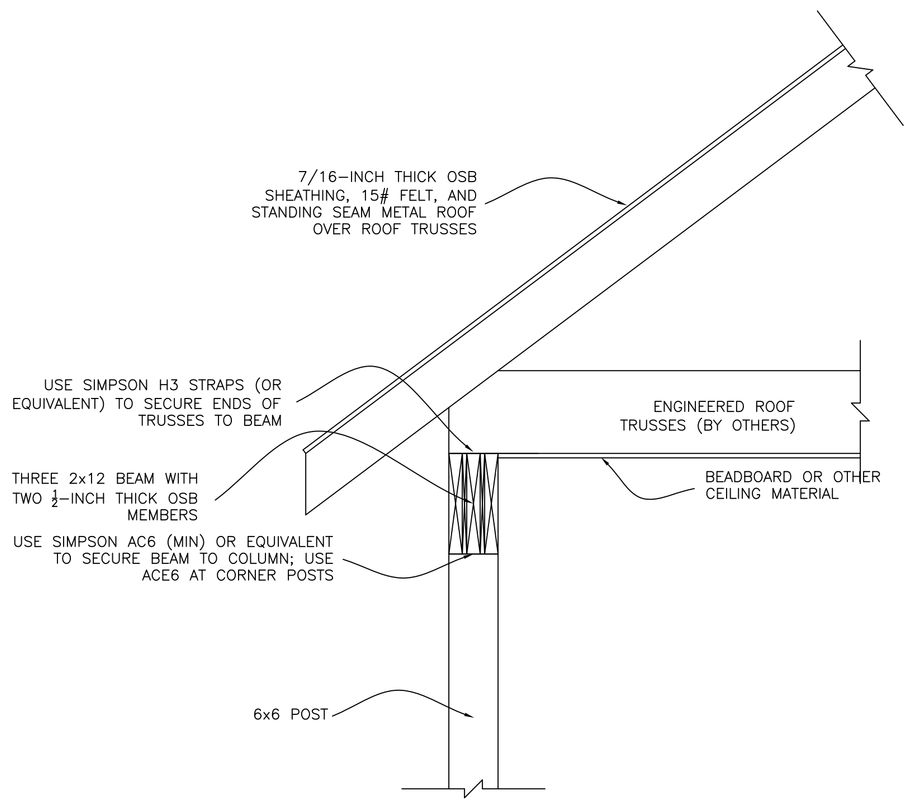

1 D1 Truss Support at Covered Deck
Scale: 1" = 1'

NOTES:
*OSB MEMBERS WITH BEAM PRESENT TO PAD BEAM OUT TO WIDTH OF SUPPORT POST

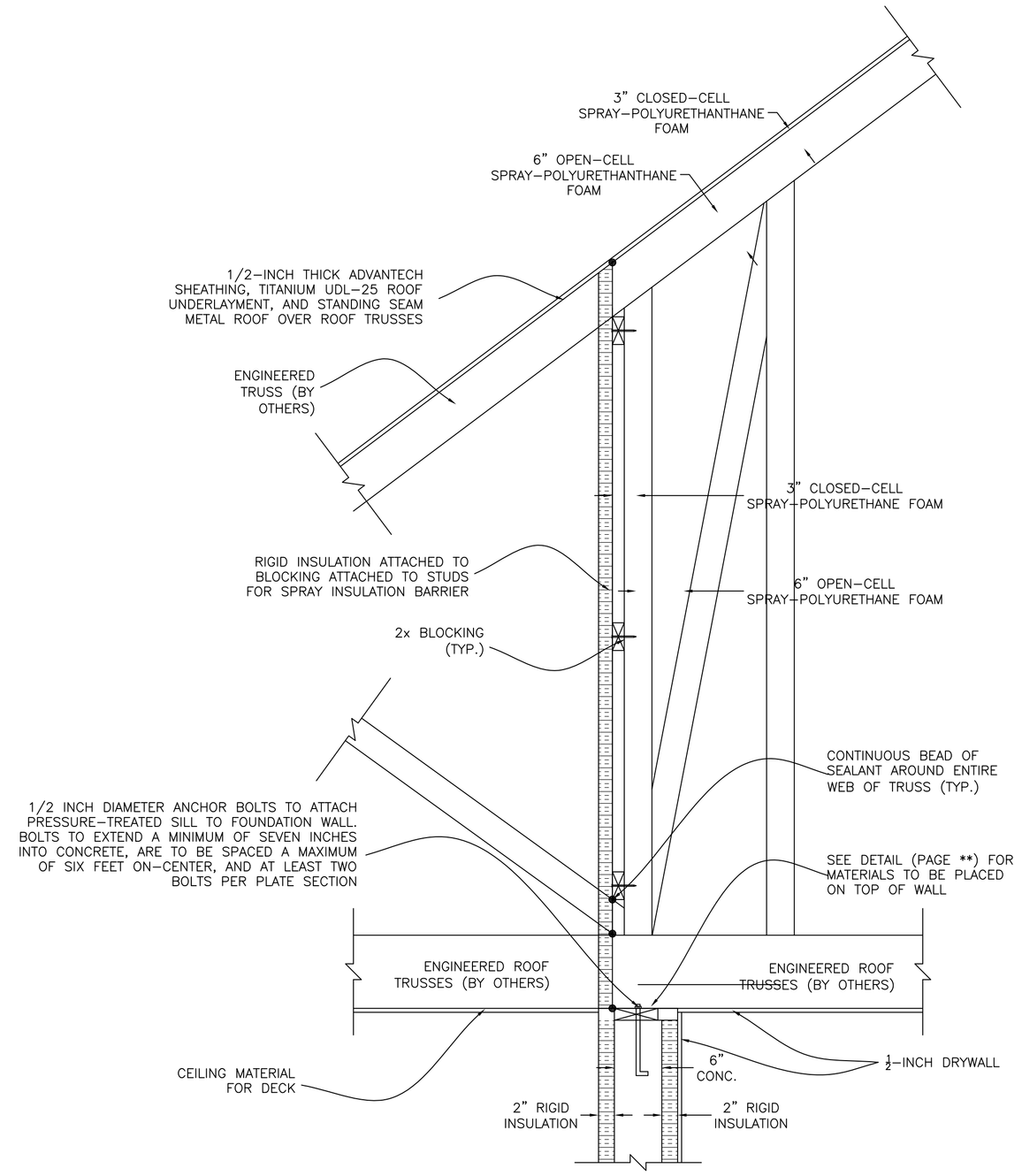

2 D1 Wall Section at ICF Wall at Porch/Deck
Scale: 1" = 1'

NOTES:
*WALL HEADERS AND OPENING NOT SHOWN FOR CLARITY
*SEE ** FOR HOLD-DOWN STRAPS TO BE USED
*MINIMUM R-38 INSULATION FOR ROOF.

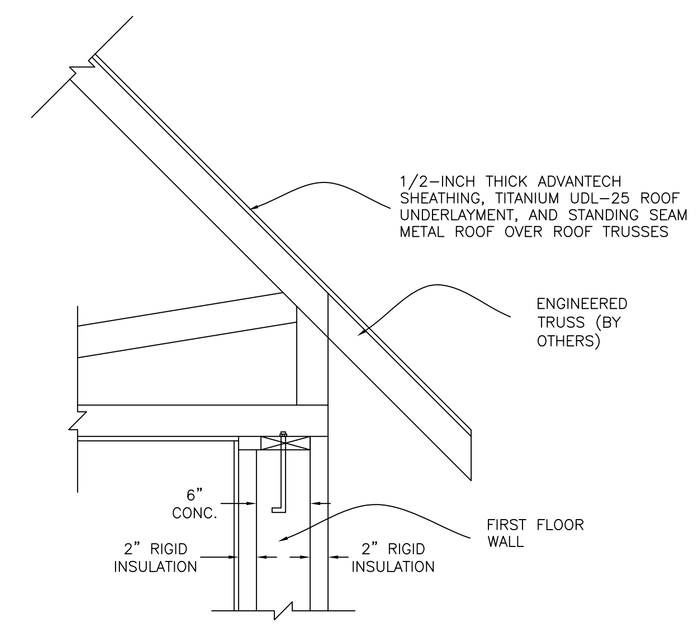

3 D1 Wall Section at ICF Wall at BOnus Room St
Scale: 1" = 1'

NOTES:
*WALL HEADERS AND OPENING NOT SHOWN FOR CLARITY
*SEE ** FOR HOLD-DOWN STRAPS TO BE USED
*MINIMUM R-38 INSULATION FOR ROOF.

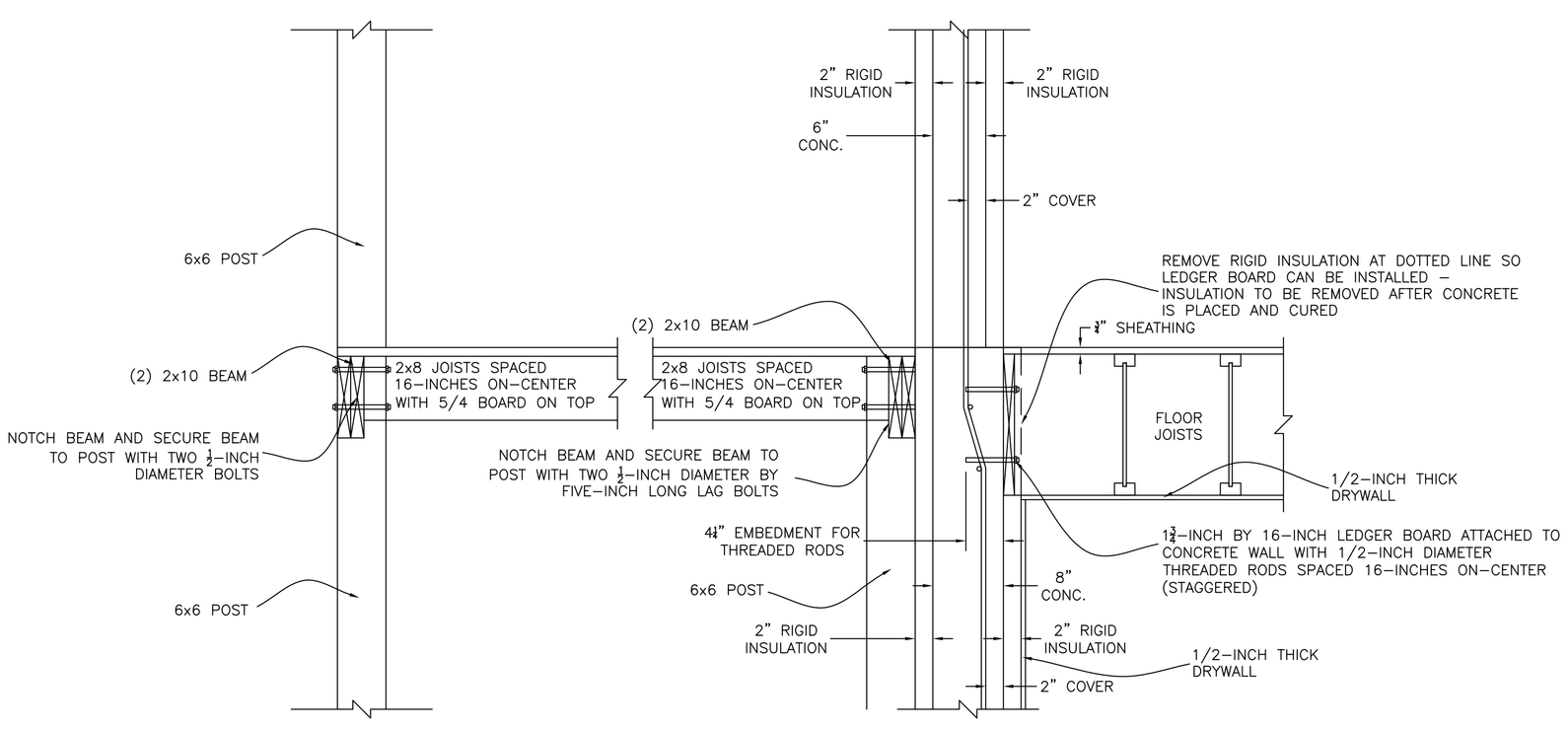

4 D1 Framing Detail at Rear Porches
Scale: 1" = 1'

NOTES:
*SLOPE DECK SO WATER FLOWS AWAY FROM HOUSE
*TOP OF DECK TO BE AT SAME ELEVATION AS TOP OF FLOOR IN HOUSE.

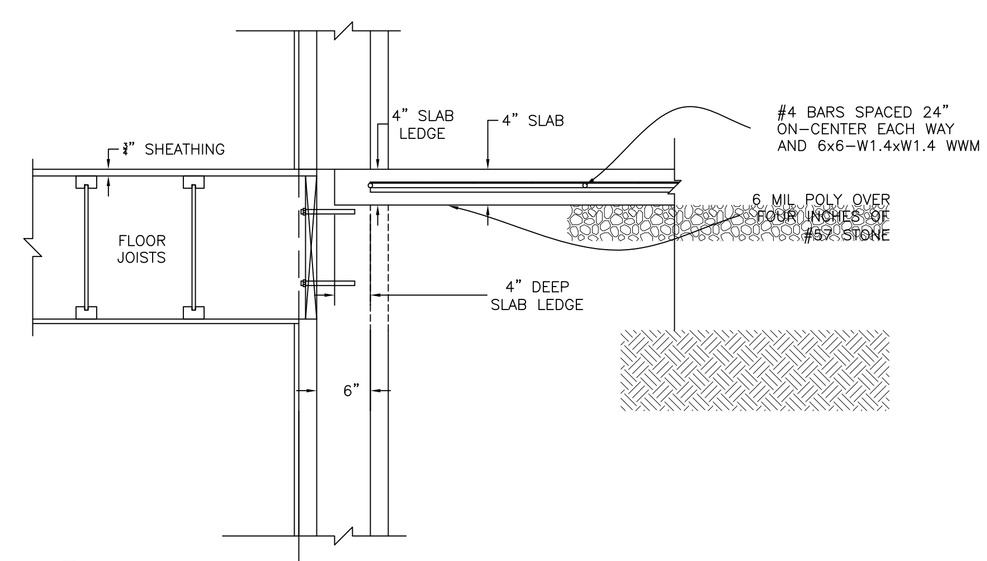

5 D1 Framing Detail at Garage Slab Near Stairwell
Scale: 1" = 1'

NOTES:
*SLOPE GARAGE SLAB DOWN SIX INCHES TO FRONT DOORS
*GRADE BEAM FOR ENGINEERED SLAB NOT SHOWN.

DATE	NO.	REVISION

ALEXCOM & ASSOCIATES, INC.
GEOTECHNICAL / CIVIL AND STRUCTURAL ENGINEERS
11 DEBRUEN LANE
FREDERICKSBURG, VIRGINIA 22405
PHONE (540) 371-3157, FAX (540) 371-7920

Details
for Eric Kessler
Potomac Landing (Lot 75)
King Geroge County, Virginia

DESIGNED BY	DATE
M.W.W.	12/20/13
CHECKED BY	DATE
M.W.W.	12/20/13
DRAWN BY	DATE
M.W.W.	12/16/13
SURVEYED BY	DATE

SCALE 1/4" = 1'
SHEET D1 OF 1 SHEETS
JOB NUMBER 130118

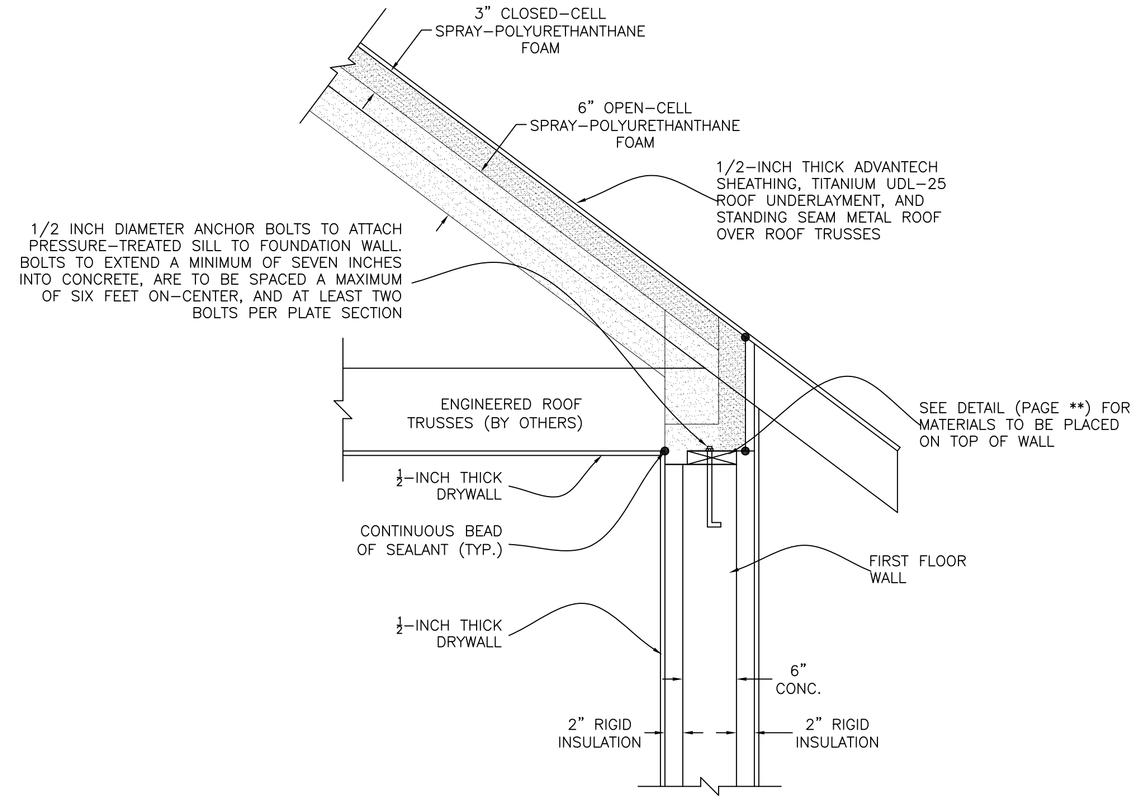

D / A4 **Wall Section at Attic Truss End over ICF Wall**

Scale: 1" = 1'

NOTES:
*WALL HEADERS AND OPENING NOT SHOWN FOR CLARITY
*SEE ** FOR HOLD-DOWN STRAPS TO BE USED
*MINIMUM R-38 INSULATION FOR ROOF.

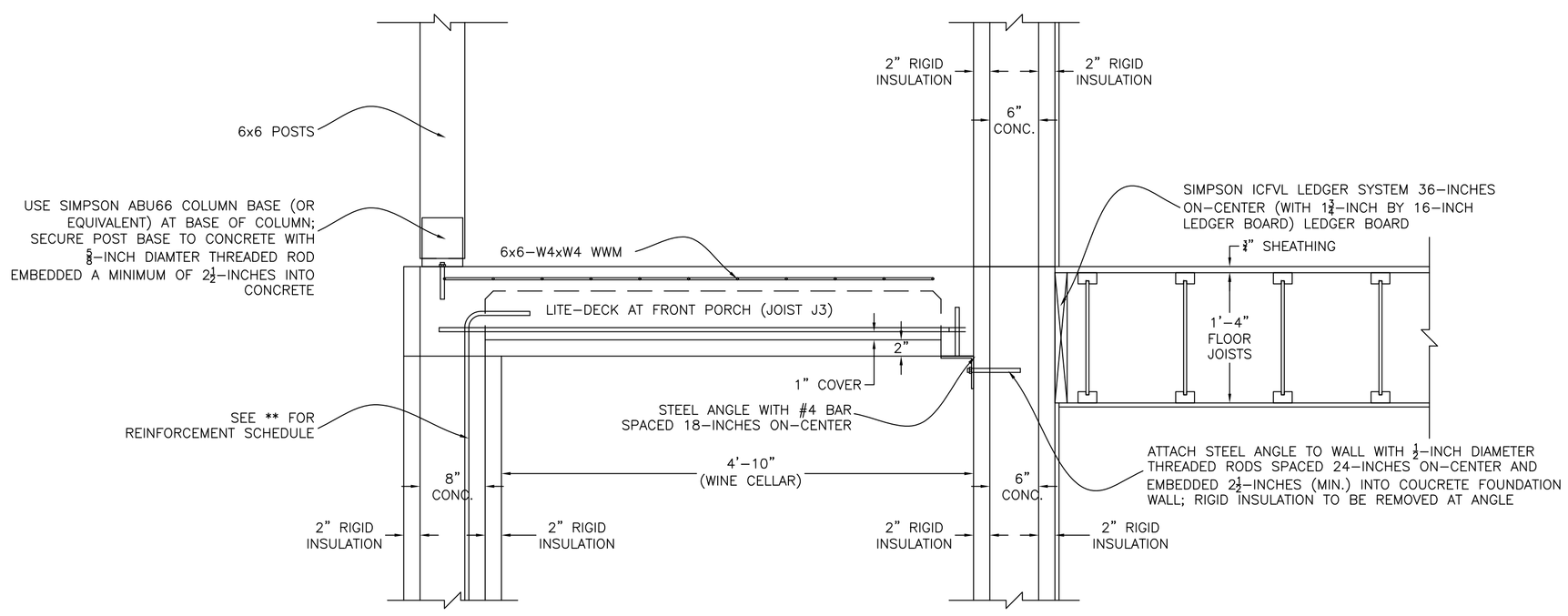

3 / D2 **Framing Detail at Front Porch**

Scale: 1" = 1'

NOTES:
*SLOPE LITE-DECK TOPPING SO WATER FLOWS AWAY FROM HOUSE
*TOP SURFACE OF LITE-DECK TO BE LEVEL WITH FLOOR LEVEL IN RESIDENCE
*STEEL ANGLE TO BE GALVANIZED
*THREADED ROD TO BE A307 ROD (OR BETTER)
*USE SIMPSON AT ANCHORING ADHESIVE FOR THREADED RODS.

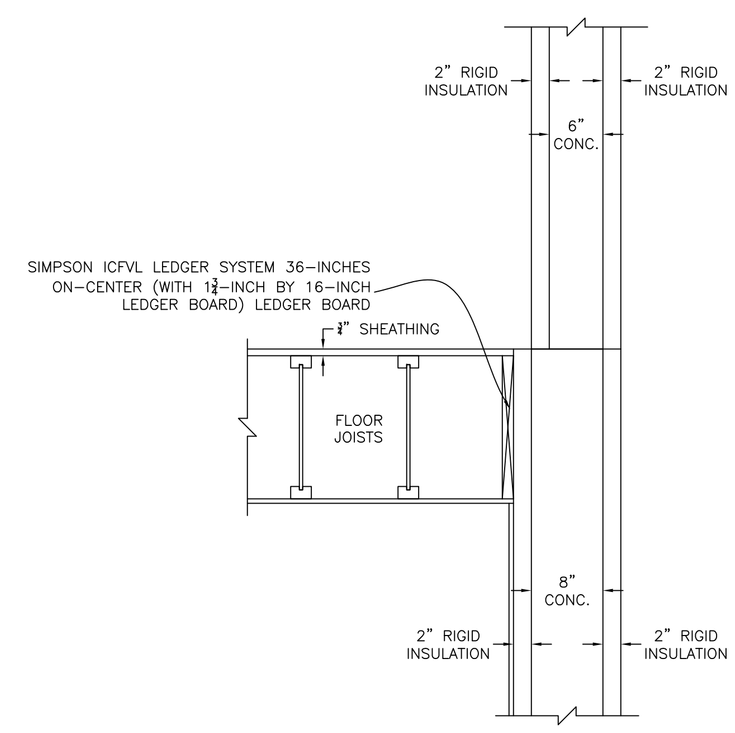

4 / D2 **Framing Detail at Rear Wall at Great Room**

Scale: 1" = 1'

NOTES:
*SLOPE DECK SO WATER FLOWS AWAY FROM HOUSE
*TOP OF DECK TO BE AT SAME ELEVATION AS TOP OF FLOOR IN HOUSE.

DATE	NO.	REVISION

J:\Alexcom\Jobs_C_drive\2013\Alex_13\130118\Alex_130118.dwg

ALEXCOM & ASSOCIATES, INC.
GEOTECHNICAL / CIVIL AND STRUCTURAL ENGINEERS
11 DEBRUEN LANE
FREDERICKSBURG, VIRGINIA 22405
PHONE (540) 371-3157, FAX (540) 371-7920
SOIL DESIGN ENGINEERING

Details

for Eric Kessler

Potomac Landing (Lot 75)

King Geroge County, Virginia

DESIGNED BY	DATE
M.W.W.	12/20/13
CHECKED BY	DATE
M.W.W.	12/20/13
DRAWN BY	DATE
M.W.W.	12/16/13
SURVEYED BY	DATE

SCALE 1/4" = 1'

SHEET D2 OF 1 SHEETS

JOB NUMBER 130118

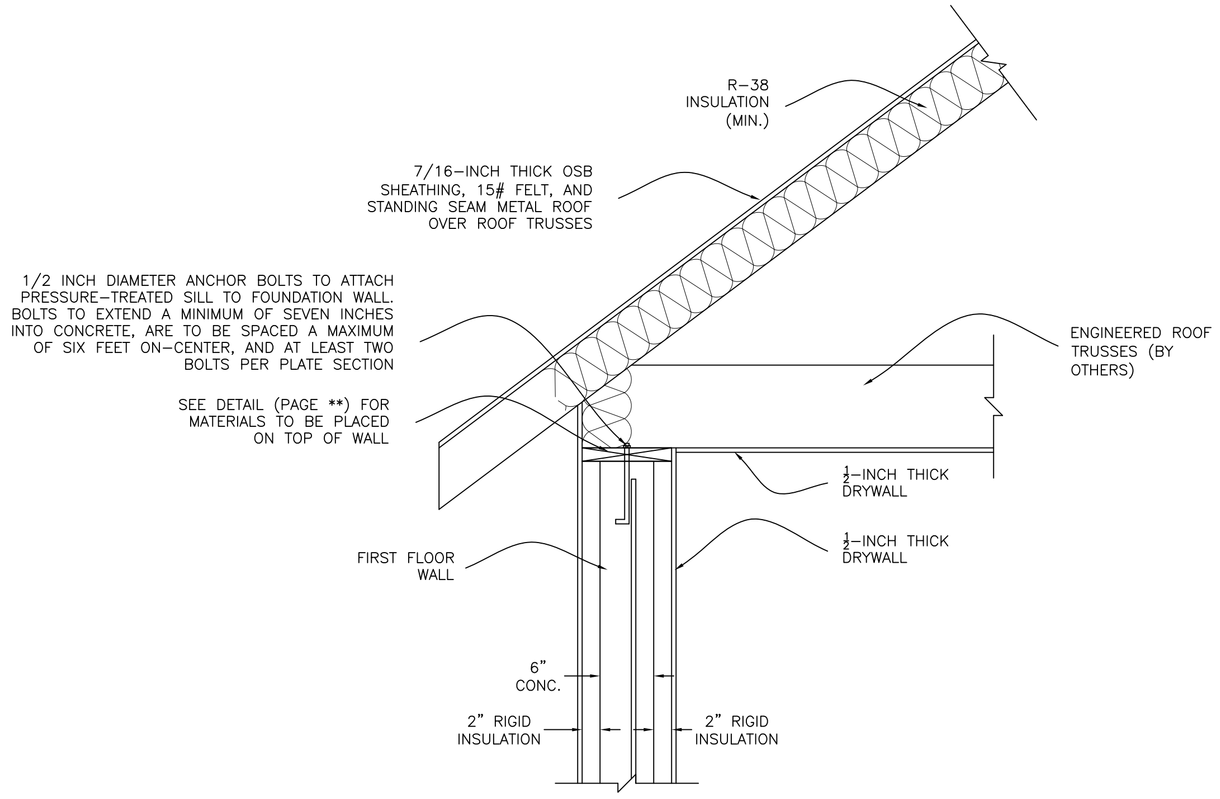

1 D3 Truss Support at Covered Deck

Scale: 1" = 1'

NOTES:
*WALL HEADERS AND OPENING NOT SHOWN FOR CLARITY
*SEE ** FOR HOLD-DOWN STRAPS TO BE USED

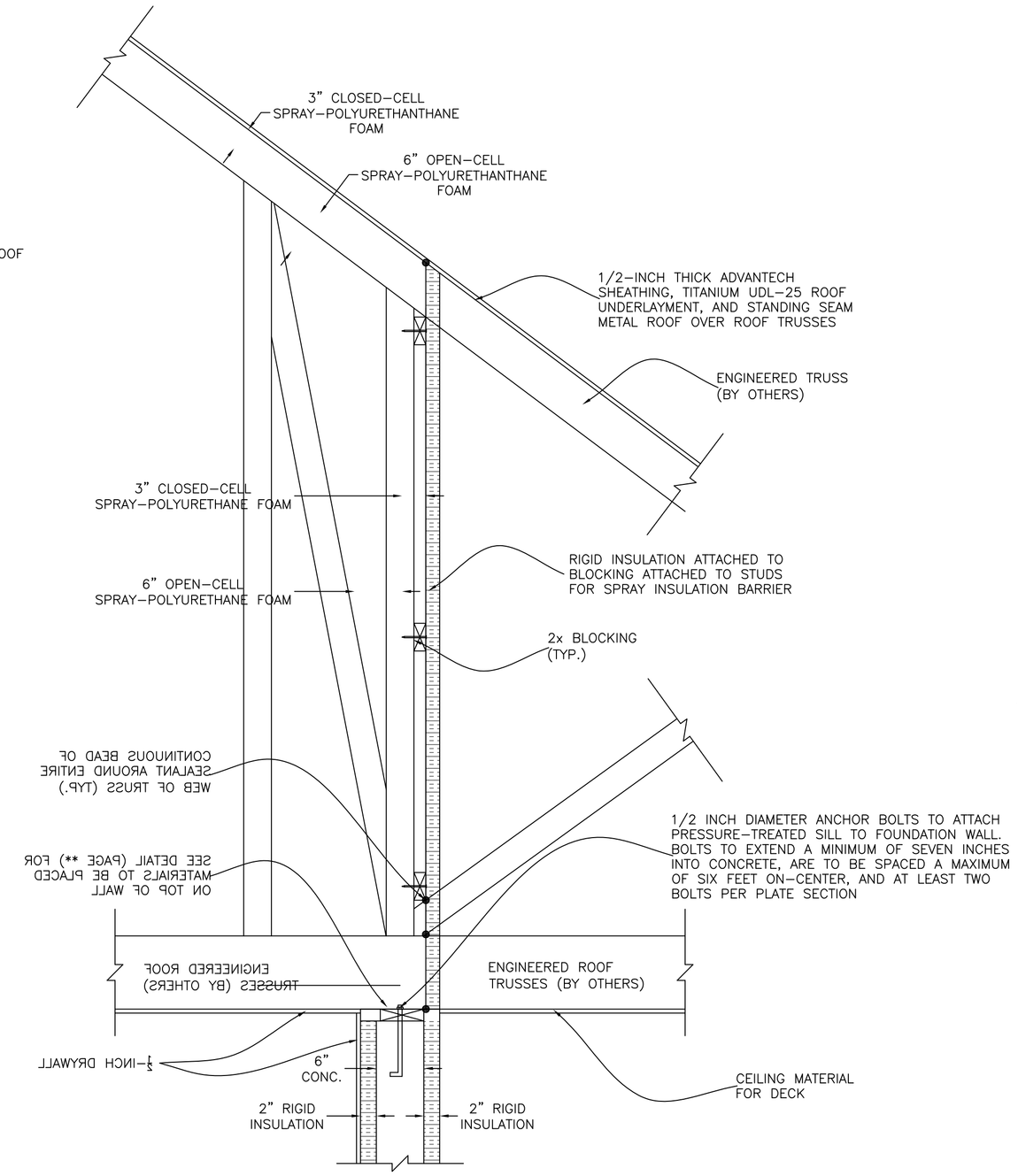

2 D3 Wall Section at ICF Wall at Porch/Deck

Scale: 1" = 1'

NOTES:
*WALL HEADERS AND OPENING NOT SHOWN FOR CLARITY
*SEE ** FOR HOLD-DOWN STRAPS TO BE USED
*MINIMUM R-38 INSULATION FOR ROOF.

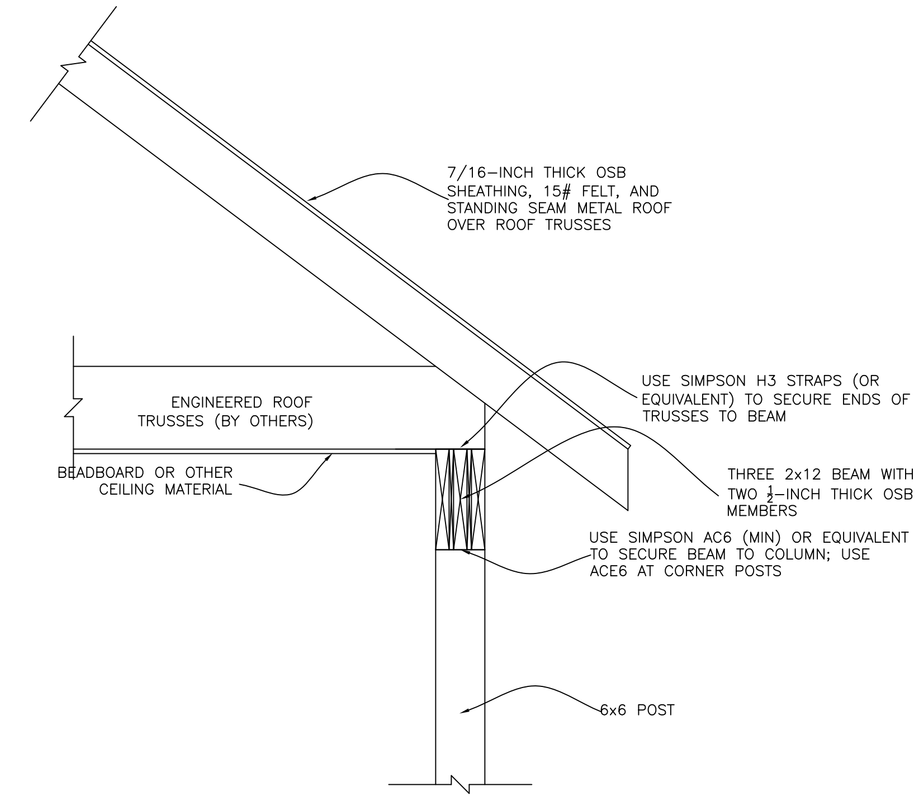

2 D3 Wall Section at ICF Wall at Porch/Deck

Scale: 1" = 1'

NOTES:
*OSB MEMBERS WITH BEAM PRESENT TO PAD BEAM OUT
TO WIDTH OF SUPPORT POST

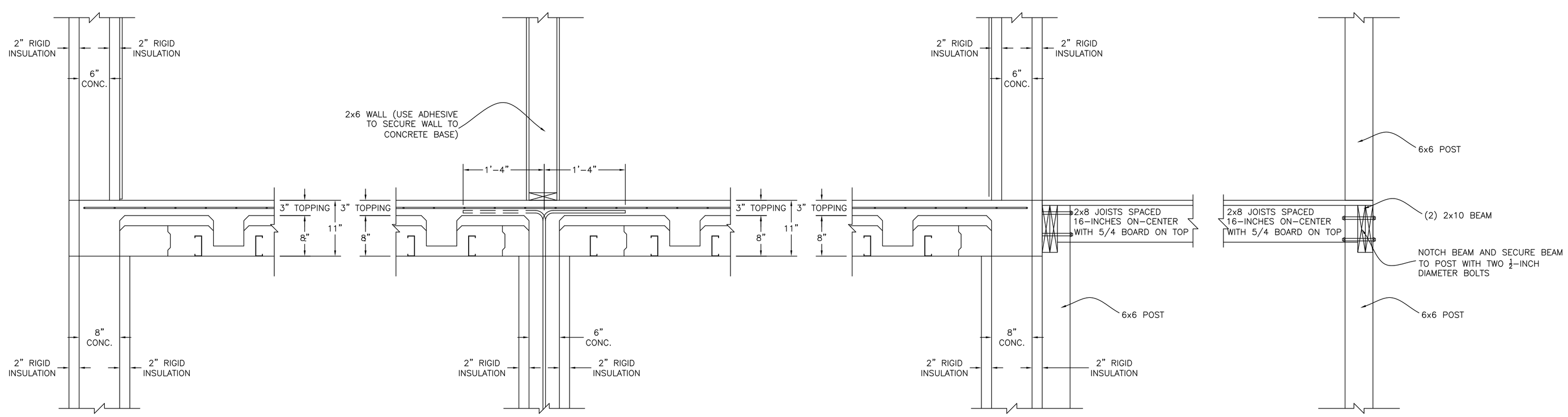

ALEXCOM & ASSOCIATES, INC.
GEOTECHNICAL / CIVIL AND
STRUCTURAL ENGINEERS
11 DEBRUEN LANE
FREDERICKSBURG, VIRGINIA 22405
PHONE (540) 371-3157, FAX (540) 371-7920

DATE	NO.	REVISION

Details

for Eric Kessler

Potomac Landing (Lot 75)

King Geroge County, Virginia

DESIGNED BY M.W.W.	DATE 12/20/13		
CHECKED BY M.W.W.	DATE 12/20/13		
DRAWN BY M.W.W.	DATE 12/16/13		
SURVEYED BY	DATE		

SCALE 1/4" = 1'

SHEET D3 OF 1 SHEETS

JOB NUMBER 130118

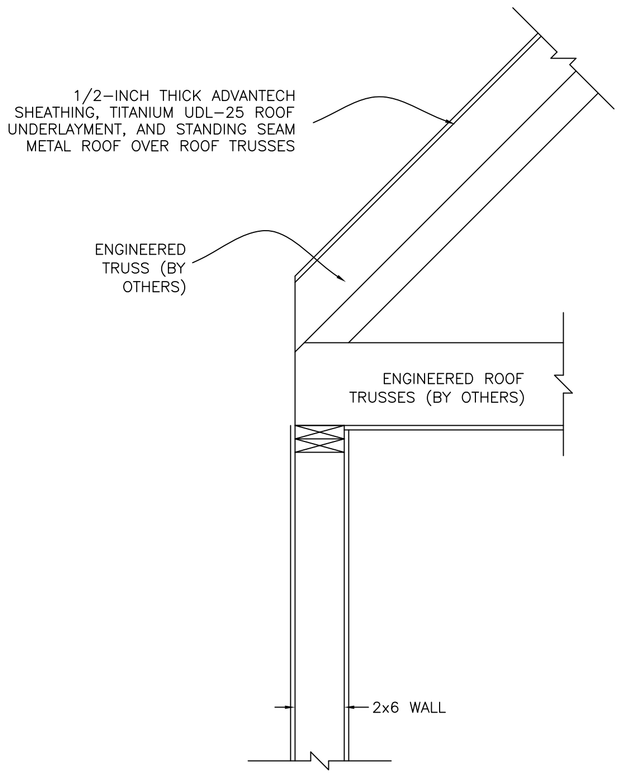

1 D4 **Wall Section at Garage**
Scale: 1" = 1'

NOTES:
*WALL HEADERS AND OPENING NOT SHOWN FOR CLARITY

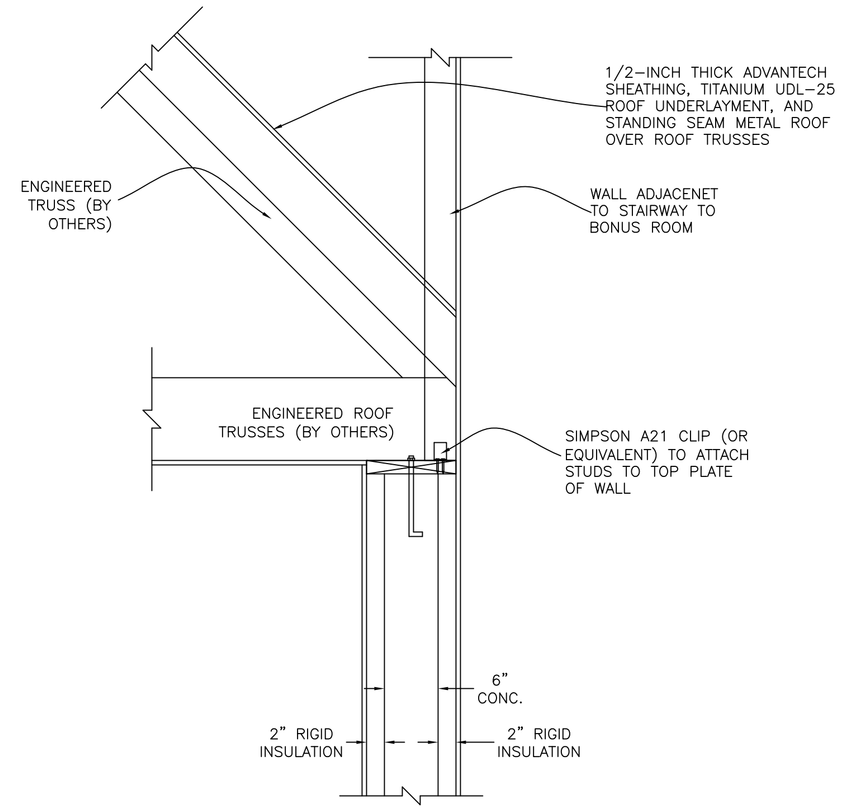

2 D4 **Wall Section at Garage**
Scale: 1" = 1'

NOTES:
*WALL HEADERS AND OPENING NOT SHOWN FOR CLARITY

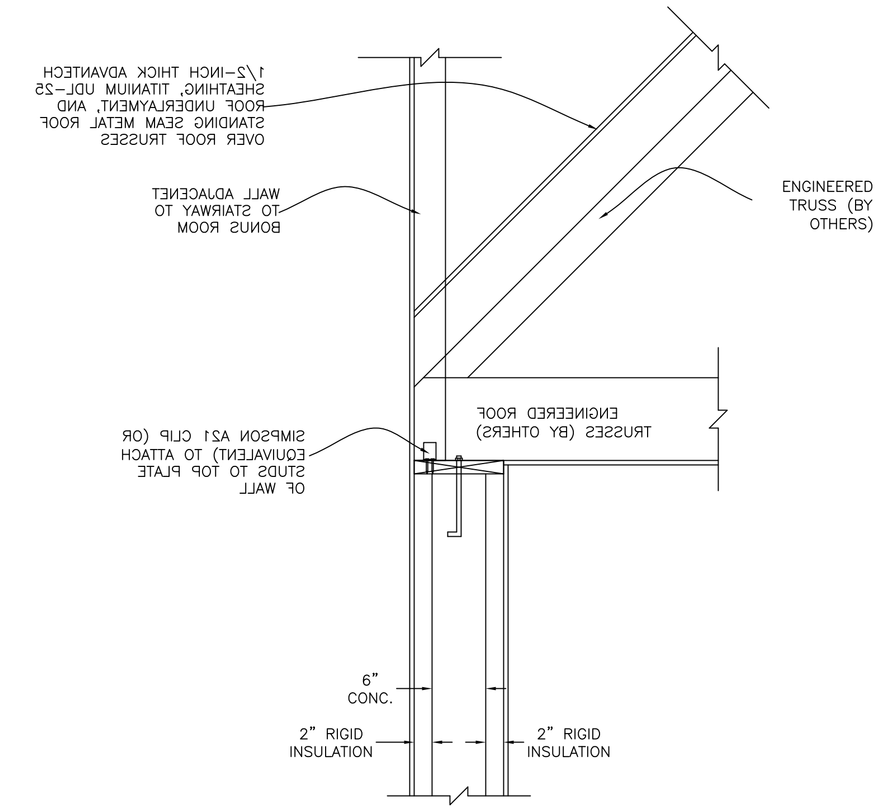

3 D4 **Wall Section at Garage**
Scale: 1" = 1'

NOTES:
*WALL HEADERS AND OPENING NOT SHOWN FOR CLARITY

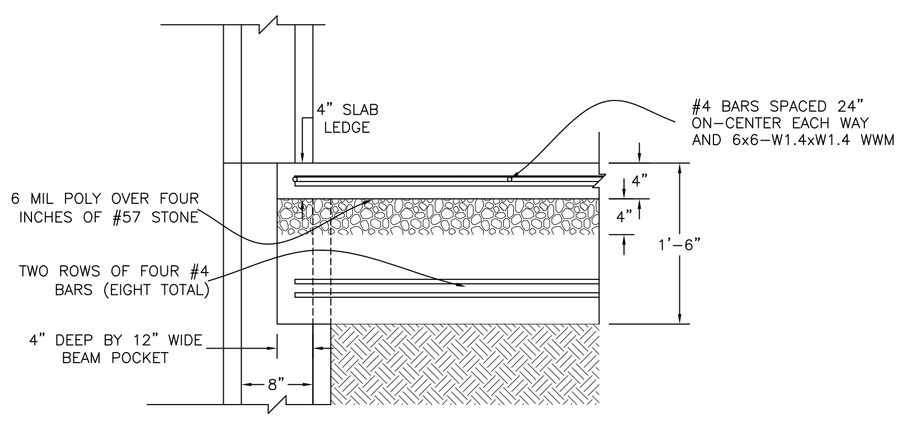

3 D4 **Typical Support for Garage Grade Beam at ICF Wall**
Scale: 1" = 1'

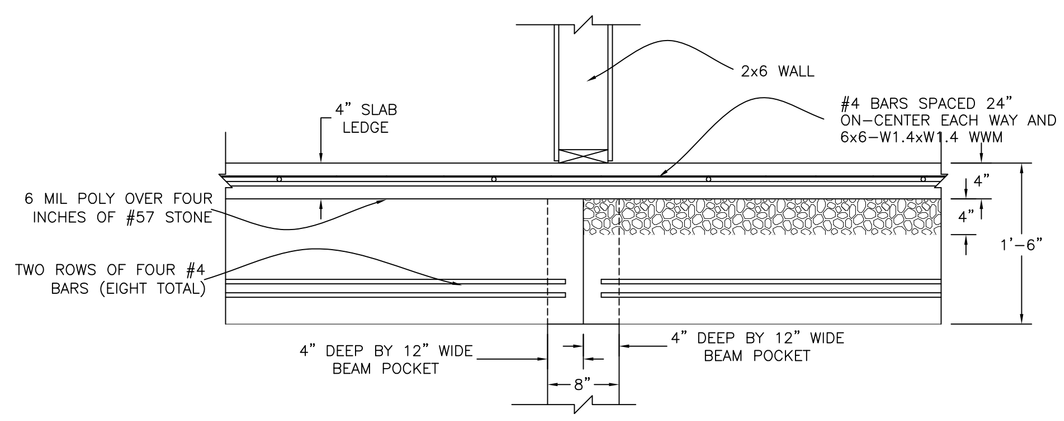

3 D4 **Typical Support for Garage Grade Beam at Concrete Wall**
Scale: 1" = 1'

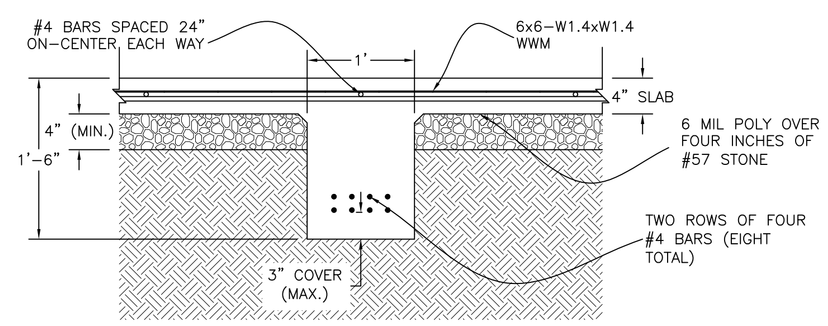

Cross-Section of Garage Grade Beam
Scale: 1" = 1'

ALEXCOM & ASSOCIATES, INC.
GEOTECHNICAL / CIVIL AND STRUCTURAL ENGINEERS
11 DEBRUEN LANE
FREDERICKSBURG, VIRGINIA 22405
PHONE (540) 371-3157, FAX (540) 371-7920

DATE	NO.	REVISION

Details
for Eric Kessler
Potomac Landing (Lot 75)
King Geroge County, Virginia

DESIGNED BY	DATE	CHECKED BY	DATE	DRAWN BY	DATE	SURVEYED BY	DATE
M.W.W.	12/20/13	M.W.W.	12/20/13	M.W.W.	12/16/13		

SCALE 1/4" = 1'
SHEET D4 OF 1 SHEETS
JOB NUMBER 130118

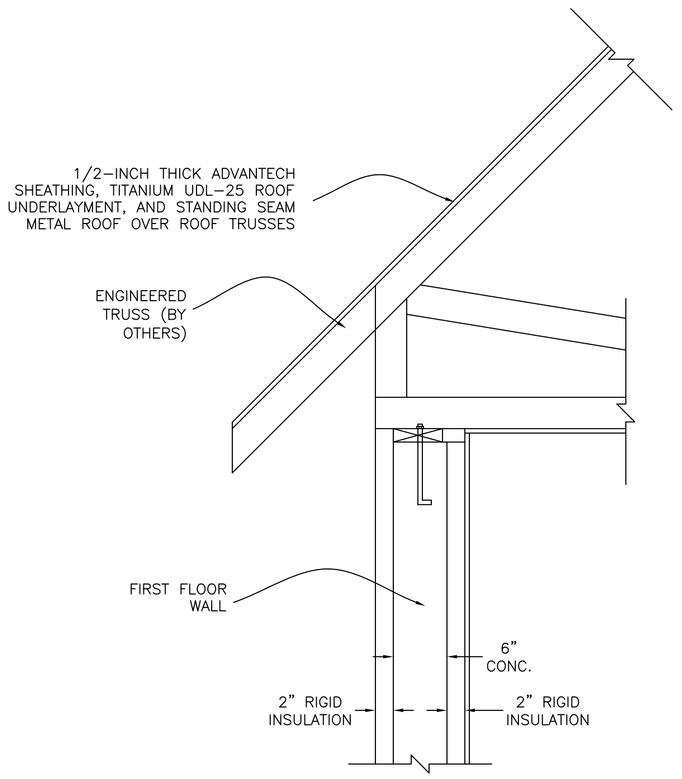

1 / D5 **Wall Section at Smaller Garage**
Scale: 1" = 1'

NOTES:
*WALL HEADERS AND OPENING NOT SHOWN FOR CLARITY

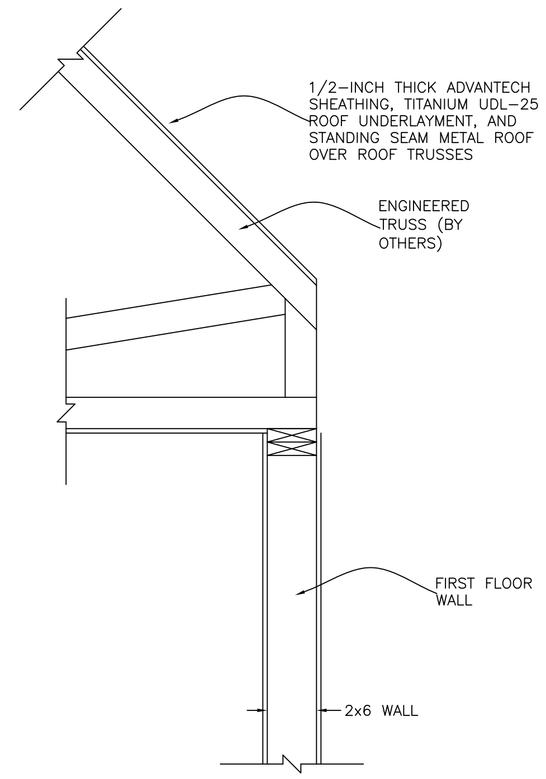

2 / D5 **Wall Section at Smaller Garage**
Scale: 1" = 1'

NOTES:
*WALL HEADERS AND OPENING NOT SHOWN FOR CLARITY

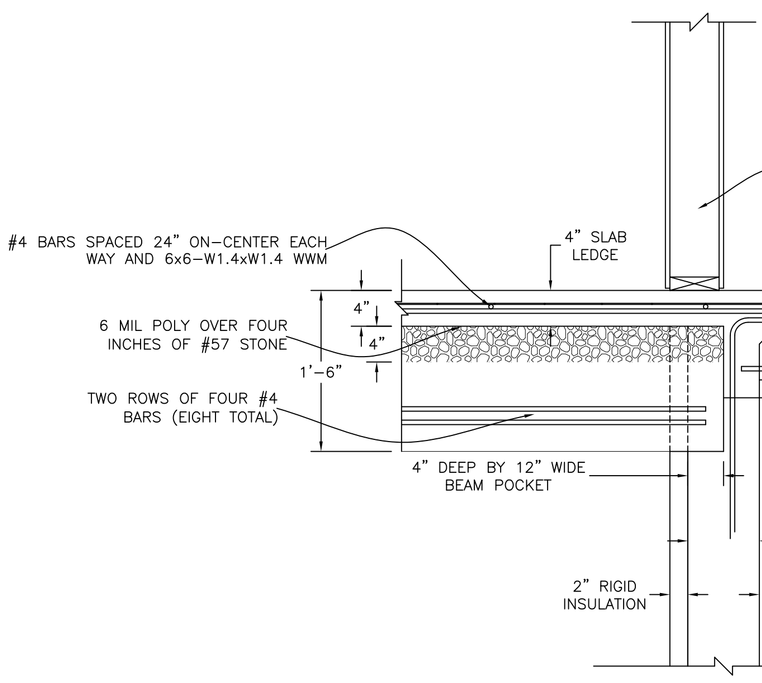

3 / D5 **Typical Support for Garage Grade Beam at ICF Wall**
Scale: 1" = 1'

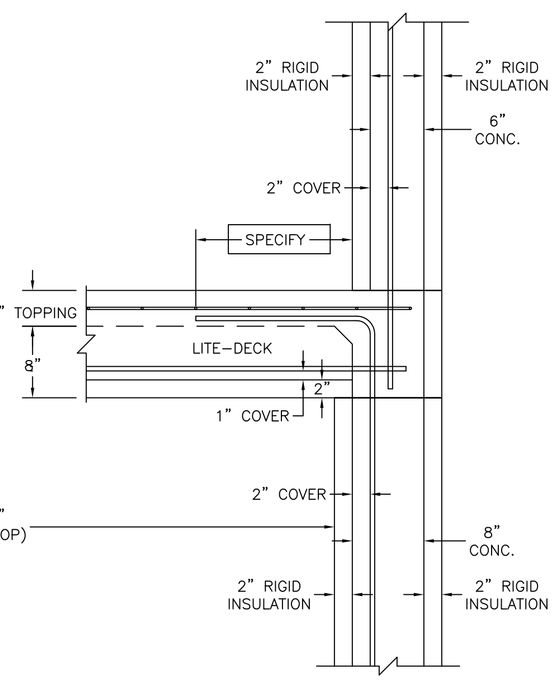

4 / D5 **Typical Support for Garage Grade Beam at ICF Wall**
Scale: 1" = 1'

ALEXCOM & ASSOCIATES, INC.
GEOTECHNICAL / CIVIL AND STRUCTURAL ENGINEERS
11 DEBRUEN LANE
FREDERICKSBURG, VIRGINIA 22405
PHONE (540) 371-3157, FAX (540) 371-7920

DATE	NO.	REVISION

J:\Projects\Jobs_of_Eric\2013\doc_13\details_1-4x1-3.dwg

Details
for Eric Kessler
Potomac Landing (Lot 75)
King Geroge County, Virginia

DESIGNED BY M.W.W.	DATE 12/20/13	
CHECKED BY M.W.W.	DATE 12/20/13	
DRAWN BY M.W.W.	DATE 12/16/13	
SURVEYED BY	DATE	

SCALE 1/4" = 1'
SHEET D5 OF 1 SHEETS
JOB NUMBER 130118

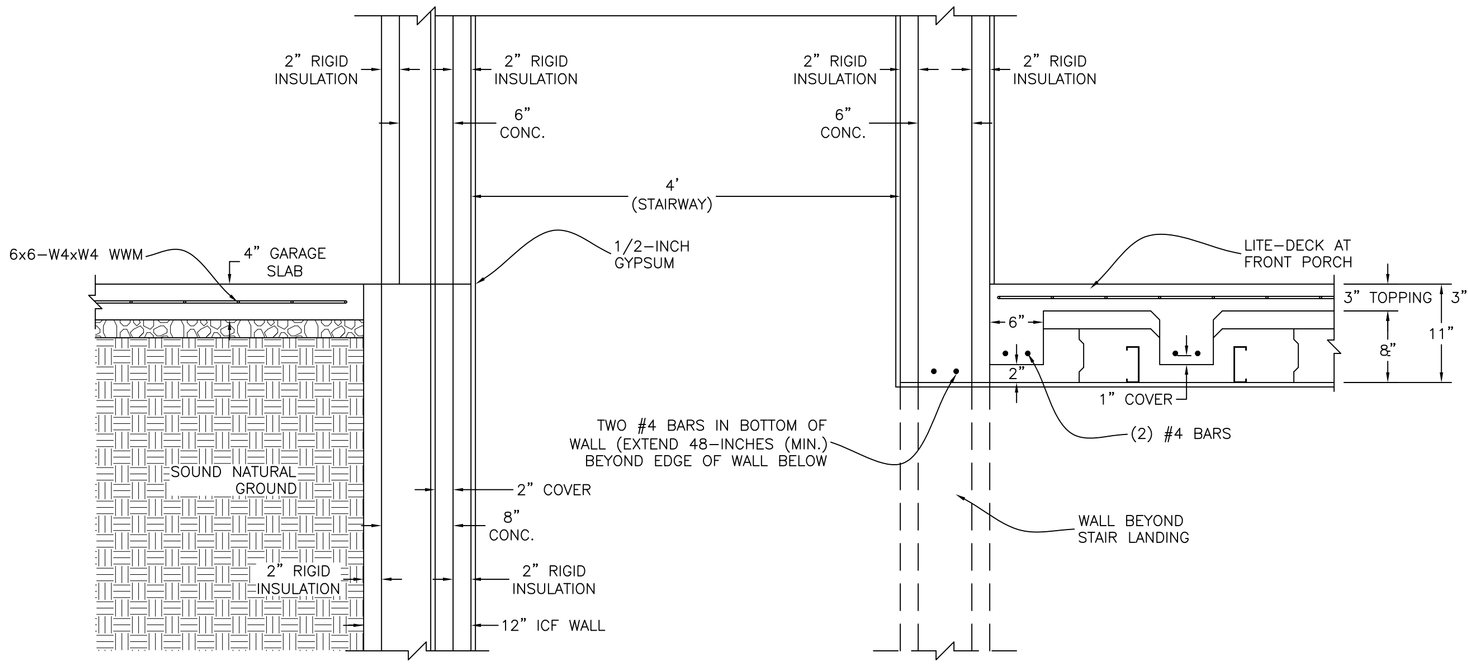

D A4 Framing Detail at Stairs to Basement (Garage)

Scale: 1" = 1'

NOTES:
*SLOPE LITE-DECK TOPPING SO WATER FLOWS AWAY FROM HOUSE.

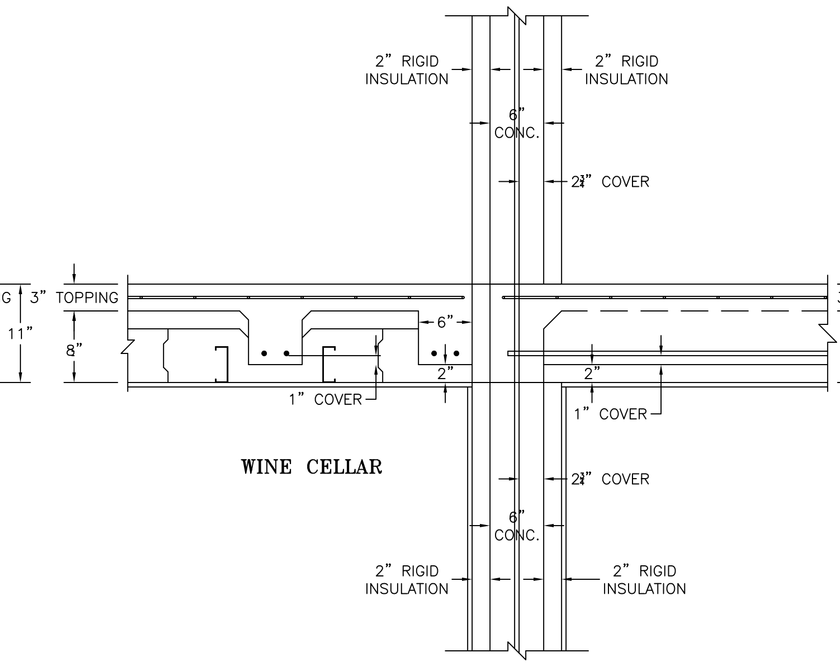

D A4 Framing Detail at Porch/Lite Deck Intersection

Scale: 1" = 1'

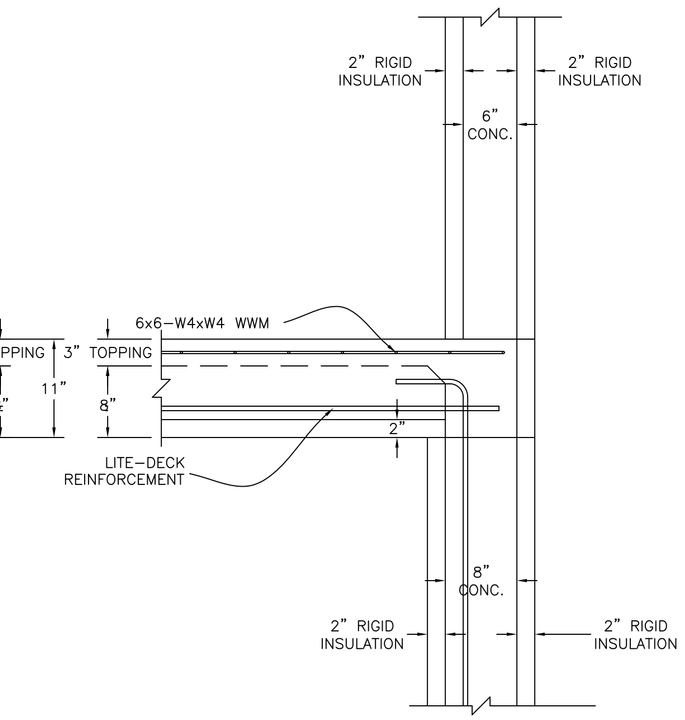

D A4 Framing Detail at Rear Porches

Scale: 1" = 1'

NOTES:
*SLOPE DECK SO WATER FLOWS AWAY FROM HOUSE
*TOP OF DECK TO BE AT SAME ELEVATION AS TOP OF FLOOR IN HOUSE.

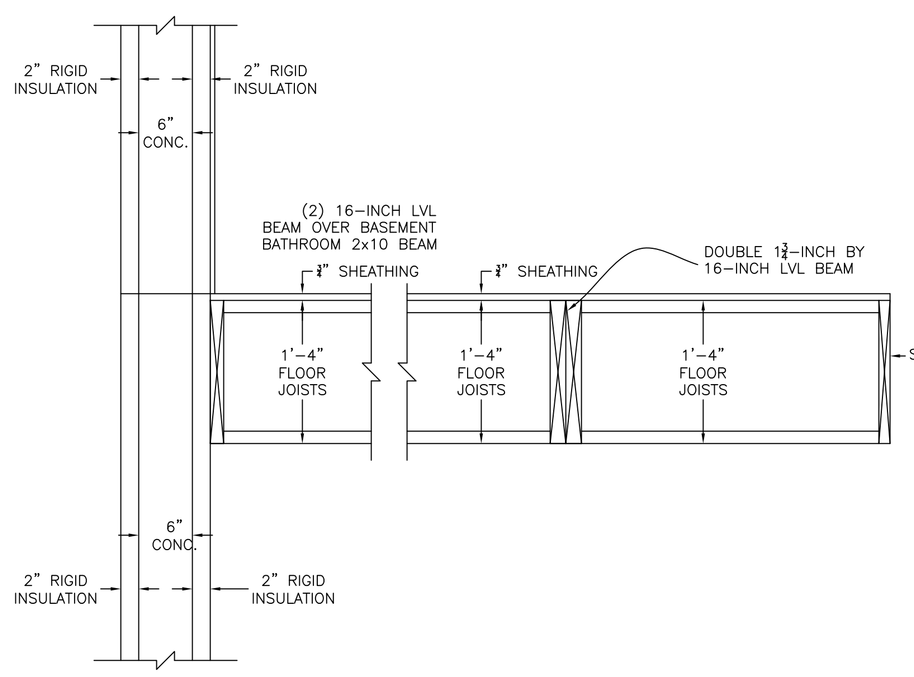

ing Detail at Lite-Deck Interface

Scale: 1" = 1'

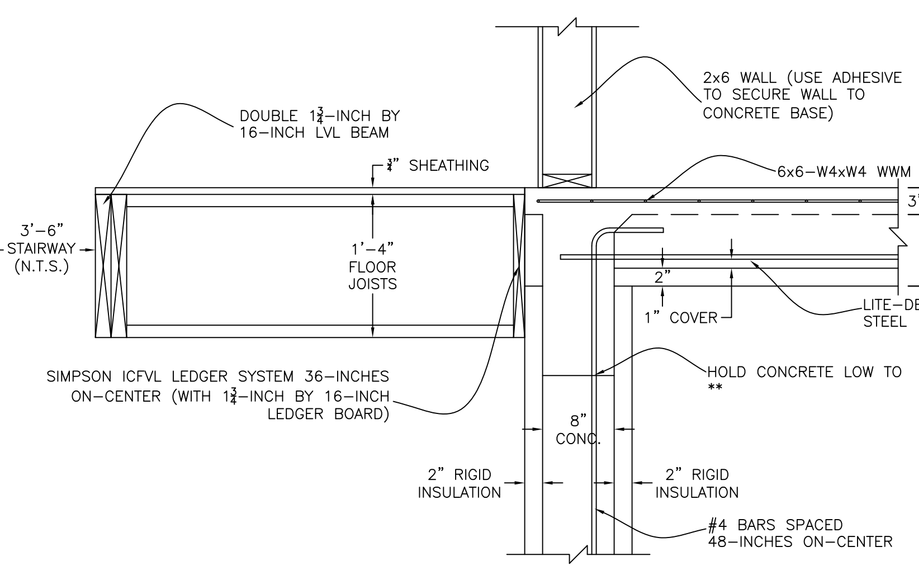

D A4 Framing Detail at Lite-Deck Interface

Scale: 1" = 1'

NOTES:
*PLACE MOISTURE RESISTANT BARRIER BETWEEN LEDGER BOARD AND LITE-DECK CONCRETE
*USE PRESSURE TREATED BOTTOM PLATE FOR 2x6 WALL.

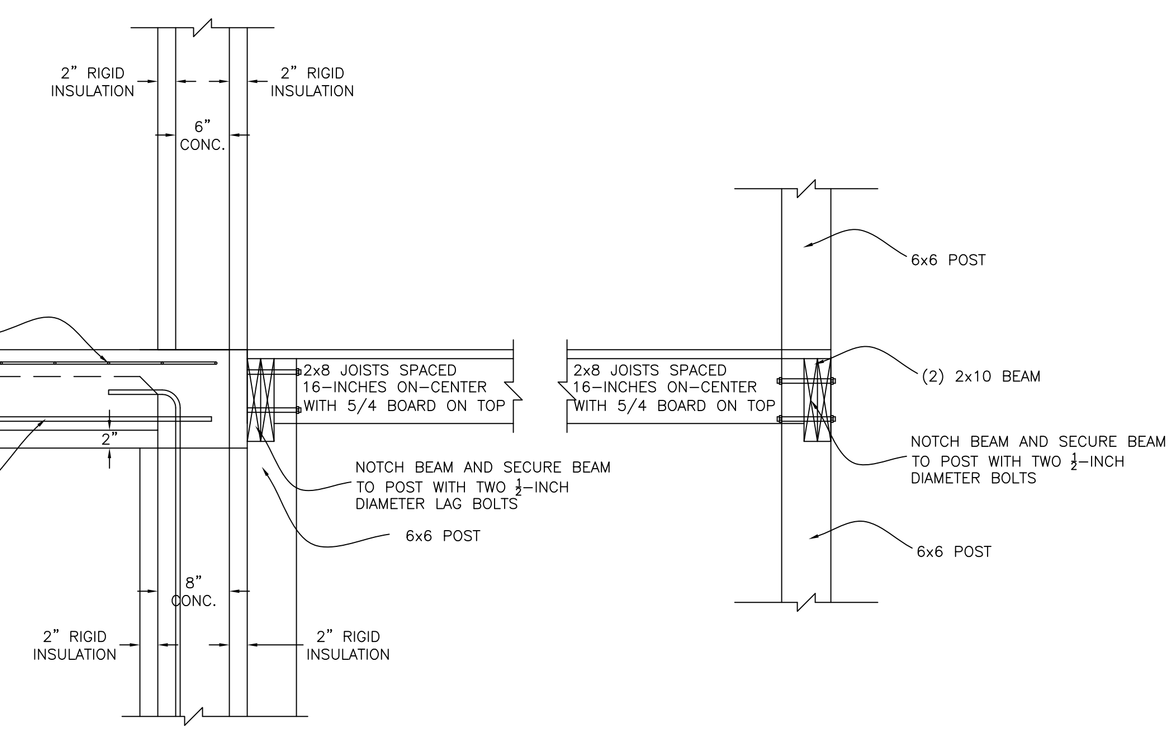

Framing Detail at Rear Porches

Scale: 1" = 1'

NOTES:
*SLOPE DECK SO WATER FLOWS AWAY FROM HOUSE
*TOP OF DECK TO BE AT SAME ELEVATION AS TOP OF FLOOR IN HOUSE.

DATE	NO.	REVISION

ALEXCOM & ASSOCIATES, INC.
GEOTECHNICAL / CIVIL AND STRUCTURAL ENGINEERS
11 DEBRUEN LANE
FREDERICKSBURG, VIRGINIA 22405
PHONE (540) 371-3157, FAX (540) 371-7920

Details

for Eric Kessler

Potomac Landing (Lot 75)

King Geroge County, Virginia

DESIGNED BY	DATE	CHECKED BY	DATE	DRAWN BY	DATE	SURVEYED BY	DATE
M.W.W.	12/20/13	M.W.W.	12/20/13	M.W.W.	12/16/13		

SCALE 1/4" = 1'

SHEET D6 OF 1 SHEETS

JOB NUMBER 130118

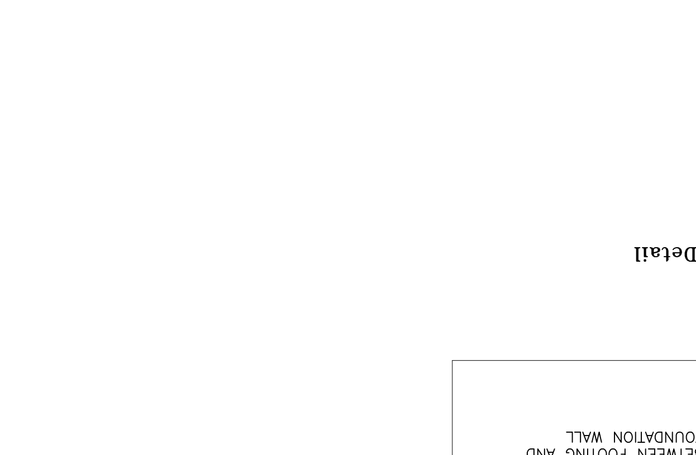

Top of Wall Detail (Section)

Scale: 1" = 1'

NOTES:
*LAYERS SHOWN THICKER THAN IN FIELD FOR CLARITY.

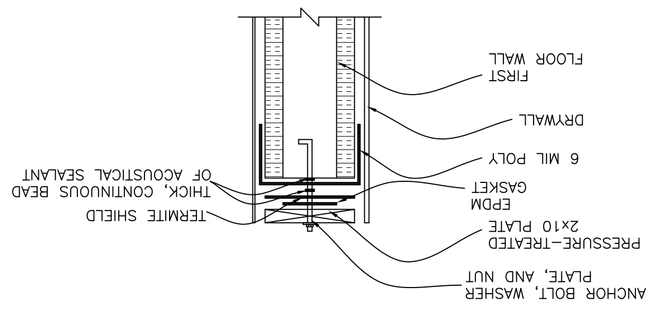

Top of Wall Detail

Scale: 1" = 1'

NOTES:
*LAYERS SHOWN THICKER THAN IN FIELD FOR CLARITY.

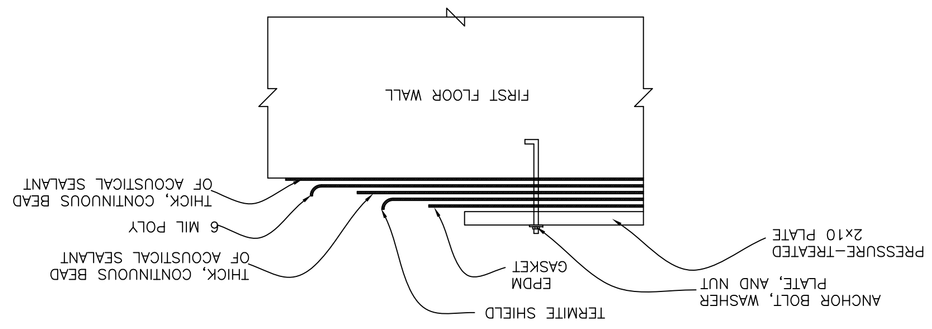

Typical ICF/Perimeter Footing Detail

Scale: 1" = 1'

NOTES:
*LAYERS SHOWN WIDER APART THAN IN FIELD FOR CLARITY.

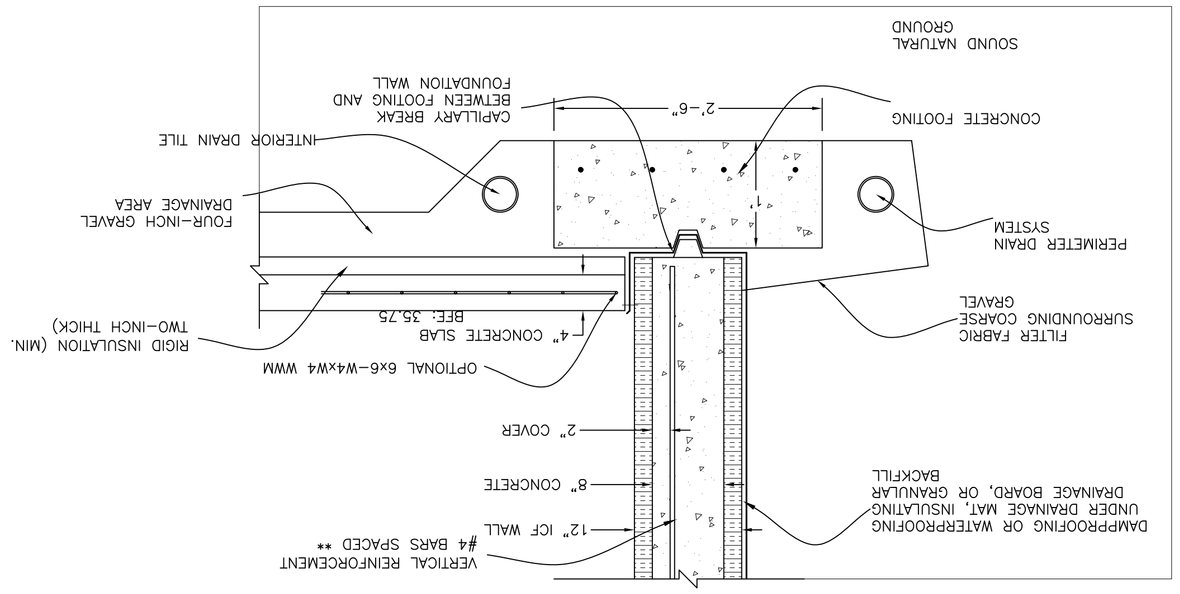

Typical Rear Porce/Covered Deck Footing Detail

Scale: 1" = 1'

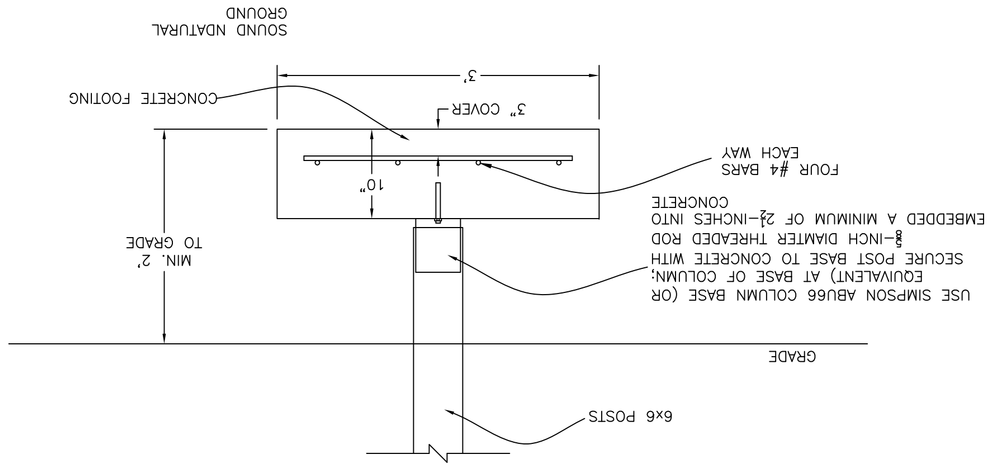

Details

for Eric Kessler

Potomac Landing (Lot 75)

King Geroge County, Virginia

ALEXCOM & ASSOCIATES, INC.
GEOTECHNICAL / CIVIL AND STRUCTURAL ENGINEERS
11 DEBRUEN LANE
FREDERICKSBURG, VIRGINIA 22405
PHONE (540) 371-3157, FAX (540) 371-7920

DESIGNED BY	DATE
M.W.W.	12/20/13
CHECKED BY	DATE
M.W.W.	12/20/13
DRAWN BY	DATE
M.W.W.	12/16/13
SURVEYED BY	DATE

SCALE 1/4" = 1'

SHEET D5 OF 1 SHEETS

JOB NUMBER 130118

DATE	NO.	REVISION

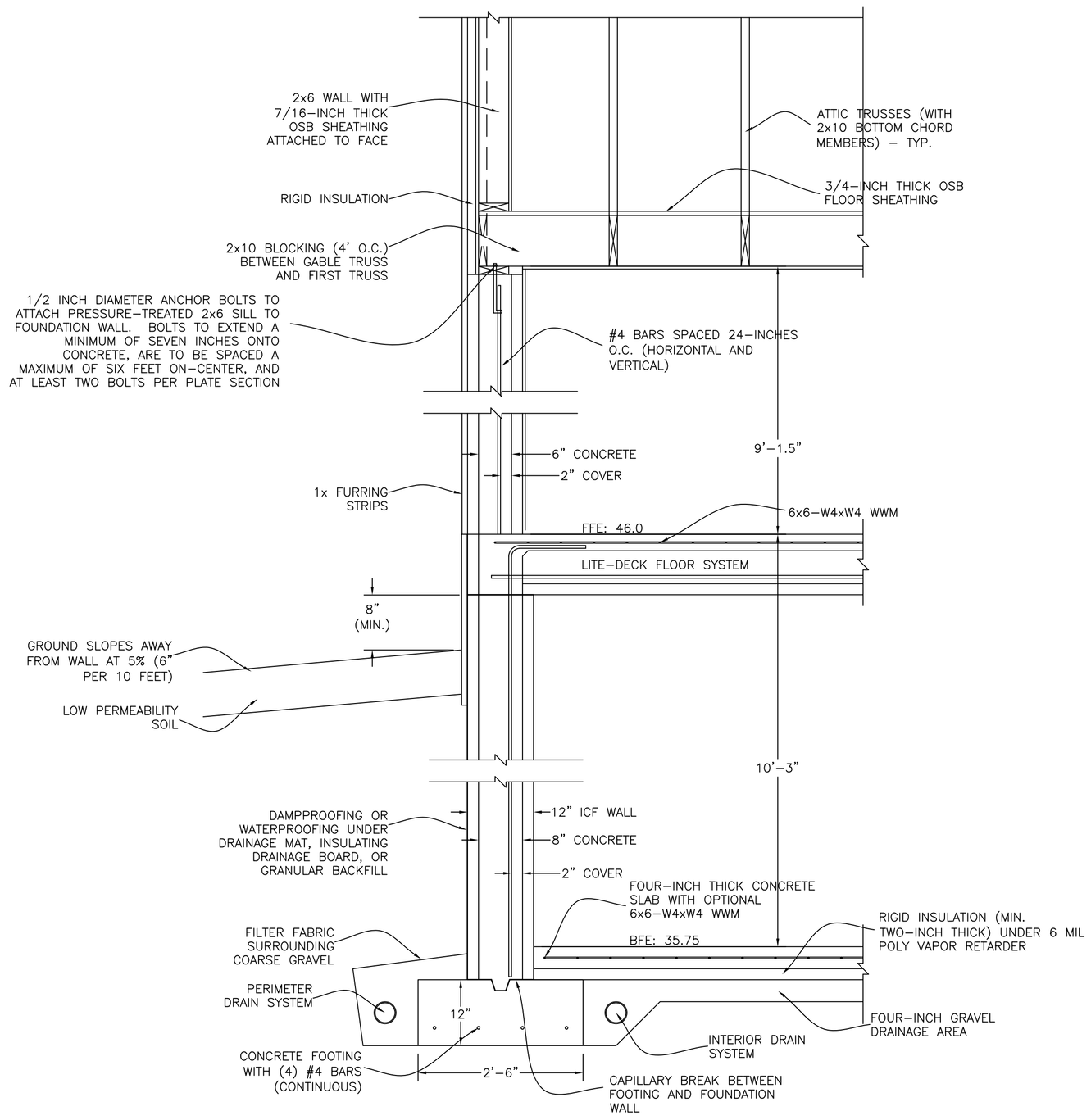

Typical Wall Section with Lite-Deck First Floor System
Scale: 3/4" = 1'

NOTES:
*SIDES OF KEYWAY IN FOOTING TO BE AT 1:3 SLOPE TO PREVENT TEARING OF CAPILLARY BREAK MATERIAL
*MINIMUM CONCRETE COMPRESSIVE STRESS FOR FOOTING AND WALL: 3000 PSI
*GRADE 60 REINFORCEMENT
*MINIMUM SOIL BEARING CAPACITY: 1500 PSF
*BOTTOM OF FOOTING TO BE PLACED ON SOUND NATURAL GROUND OR COMPACTED SOIL A MINIMUM OF 24-INCHES BELOW GRADE (FROST DEPTH)

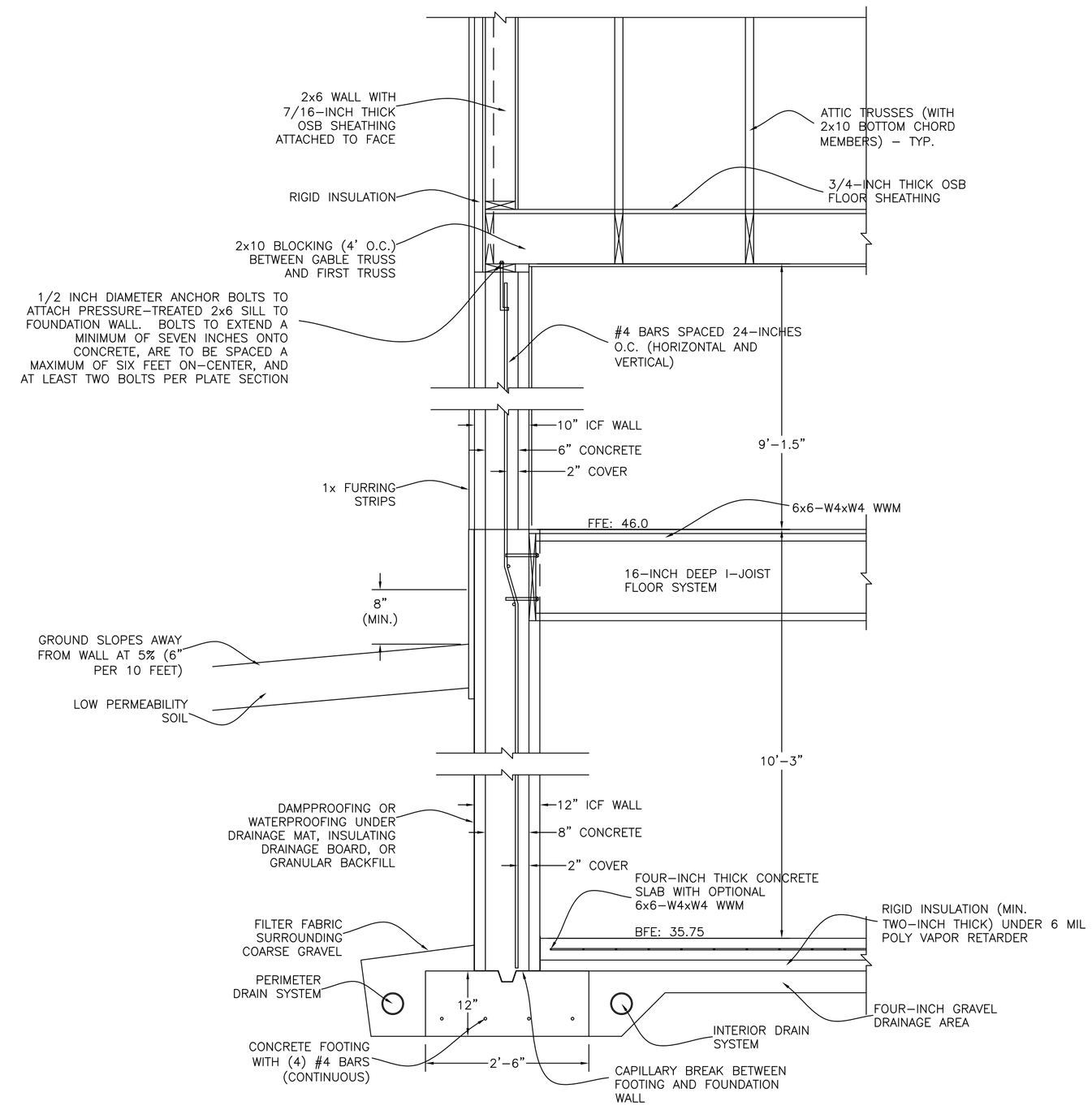

Typical Wall Section with Wood Frame First Floor System
Scale: 3/4" = 1'

NOTES:
*SIDES OF KEYWAY IN FOOTING TO BE AT 1:3 SLOPE TO PREVENT TEARING OF CAPILLARY BREAK MATERIAL
*MINIMUM CONCRETE COMPRESSIVE STRESS FOR FOOTING AND WALL: 3000 PSI
*GRADE 60 REINFORCEMENT
*MINIMUM SOIL BEARING CAPACITY: 1500 PSF
*BOTTOM OF FOOTING TO BE PLACED ON SOUND NATURAL GROUND OR COMPACTED SOIL A MINIMUM OF 24-INCHES BELOW GRADE (FROST DEPTH)

DATE	NO.	REVISION

J:\Projects\Keller_Eric\2013\Alex_13\Lowder_Sec13.dwg

ALEXCOM & ASSOCIATES, INC.
GEOTECHNICAL / CIVIL AND STRUCTURAL ENGINEERS
11 DEBRUEN LANE
FREDERICKSBURG, VIRGINIA 22405
PHONE (540) 371-3157, FAX (540) 371-7920

Wall Sections
for Eric Kessler
Potomac Landing (Lot 75)
King Geroge County, Virginia

DESIGNED BY	DATE	CHECKED BY	DATE	DRAWN BY	DATE	SURVEYED BY	DATE
M.W.W.	12/20/13	M.W.W.	12/20/13	M.W.W.	12/16/13		

SCALE 1/4" = 1'
SHEET S5 OF 1 SHEETS
JOB NUMBER 130118